PART NO. **4419**

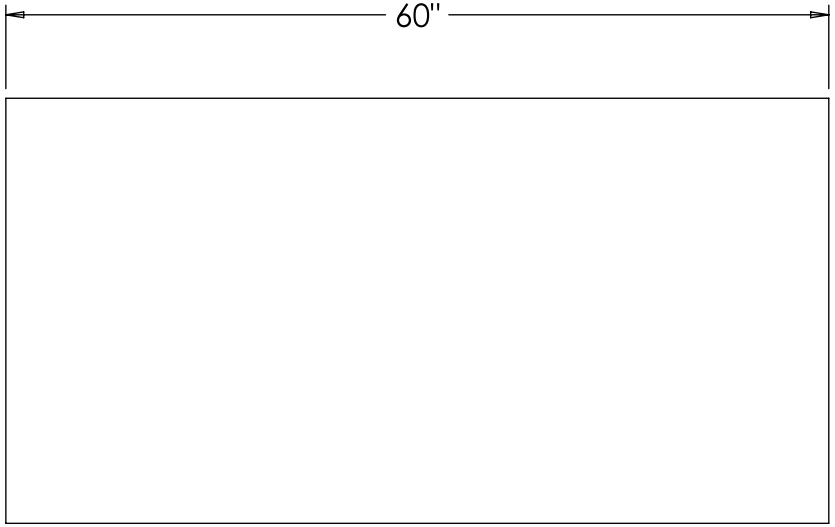

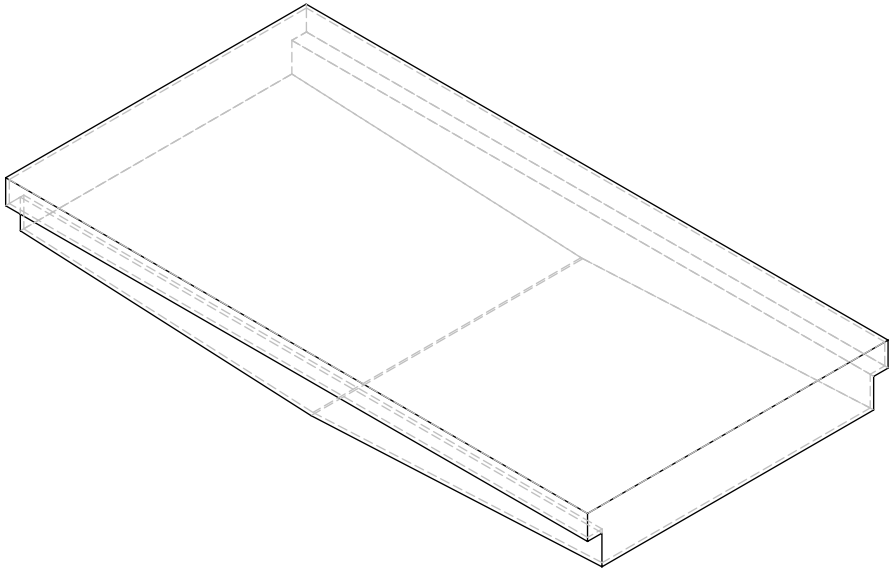

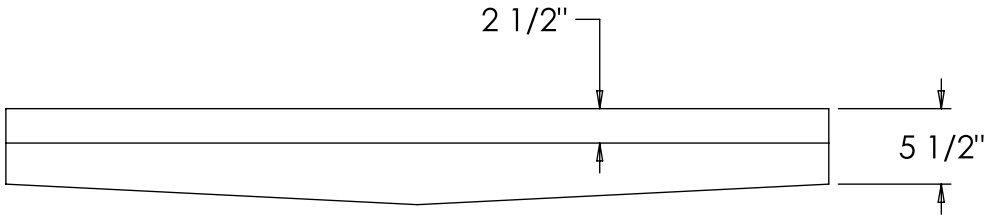

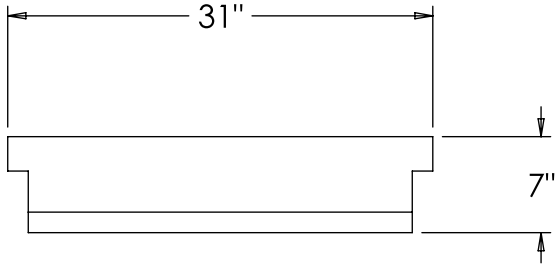

ELKHART PLASTICS CLAIMS PROPRIETARY RIGHTS IN THE MATERIAL DISCLOSED HEREON. NEITHER THIS DRAWING NOR ANY PRODUCTION THEREOF MAY BE USED TO MANUFACTURE ANYTHING SHOWN HEREON WITHOUT PERMISSION IN WRITING FROM ELKHART PLASTICS TO USER SPECIFICALLY REFERRING TO THIS DRAWING.

myers INDUSTRIES | Elkhart Plastics

MIDDLEBURY

51703 PACKARD DRIVE
MIDDLEBURY, INDIANA 46540

TITLE:

44 GALLON WATER TANK