PART NO. **1163**

ISO VIEW

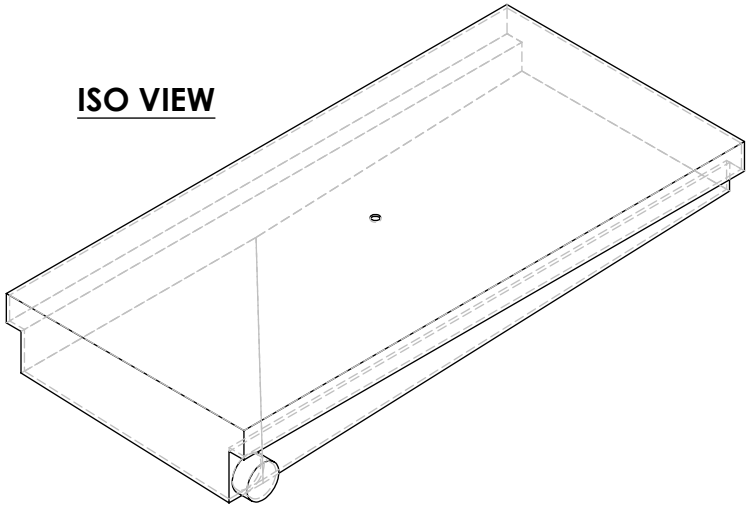

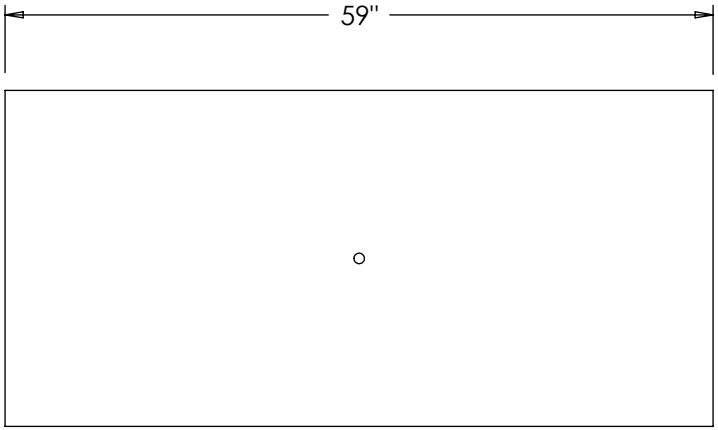

TOP VIEW

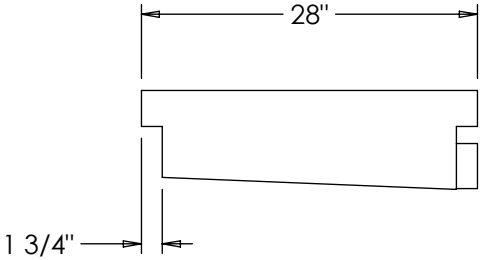

LEFT VIEW

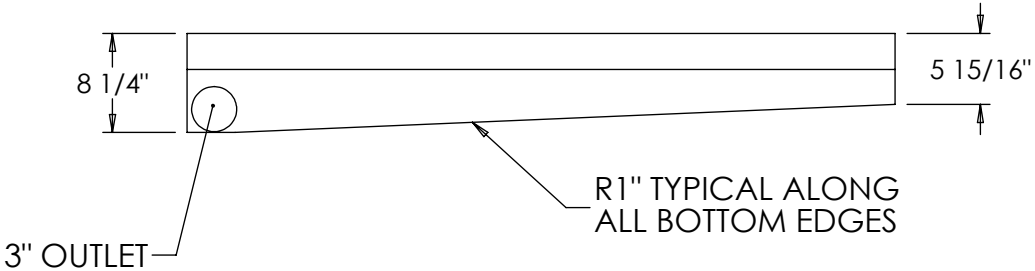

FRONT VIEW

ELKHART PLASTICS CLAIMS PROPRIETARY RIGHTS IN THE MATERIAL DISCLOSED HEREON. NEITHER THIS DRAWING NOR ANY PRODUCTION THEREOF MAY BE USED TO MANUFACTURE ANYTHING SHOWN HEREON WITHOUT PERMISSION IN WRITING FROM ELKHART PLASTICS TO USER SPECIFICALLY REFERRING TO THIS DRAWING.

ELKHART PLASTICS
MIDDLEBURY
51703 PACKARD DRIVE
MIDDLEBURY, INDIANA 46540

TITLE:

41 GALLON HOLDING TANK

PART NO. **1164**

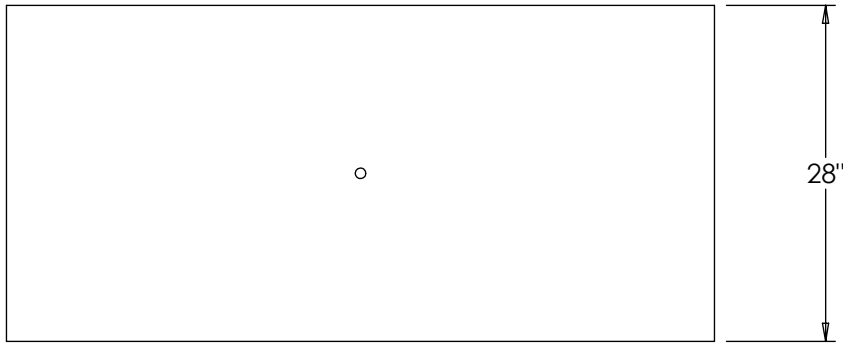

TOP VIEW

ISO VIEW

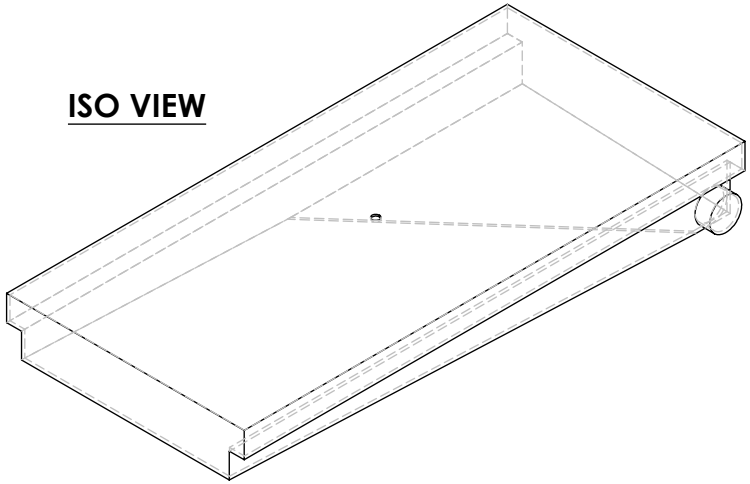

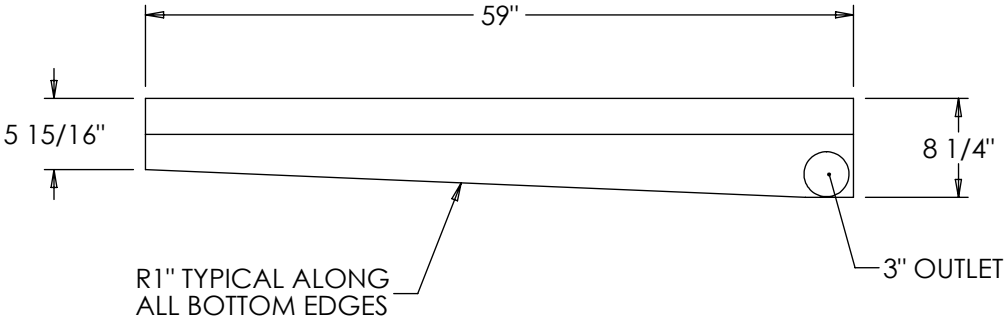

FRONT VIEW

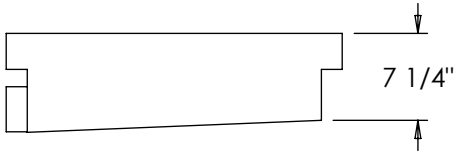

RIGHT VIEW

ELKHART PLASTICS CLAIMS PROPRIETARY RIGHTS IN THE MATERIAL DISCLOSED HEREON. NEITHER THIS DRAWING NOR ANY PRODUCTION THEREOF MAY BE USED TO MANUFACTURE ANYTHING SHOWN HEREON WITHOUT PERMISSION IN WRITING FROM ELKHART PLASTICS TO USER SPECIFICALLY REFERRING TO THIS DRAWING.

ELKHART PLASTICS
MIDDLEBURY
51703 PACKARD DRIVE
MIDDLEBURY, INDIANA 46540

TITLE:

41 GALLON HOLDING TANK

PART NO. **1534**

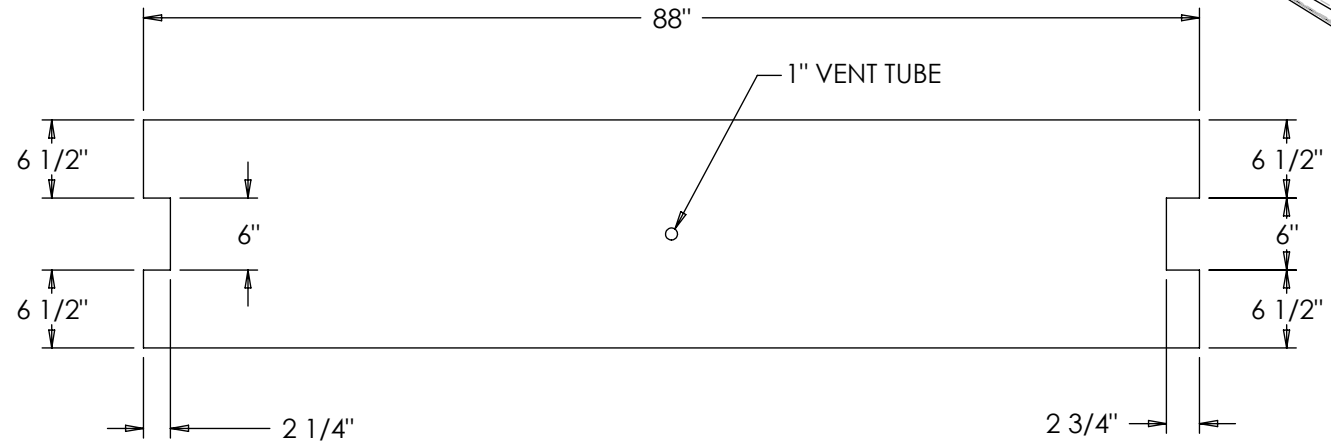

TOP VIEW

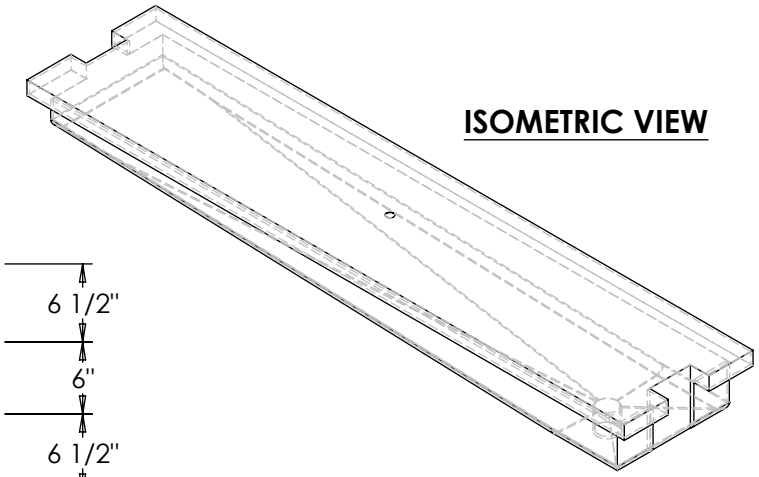

ISOMETRIC VIEW

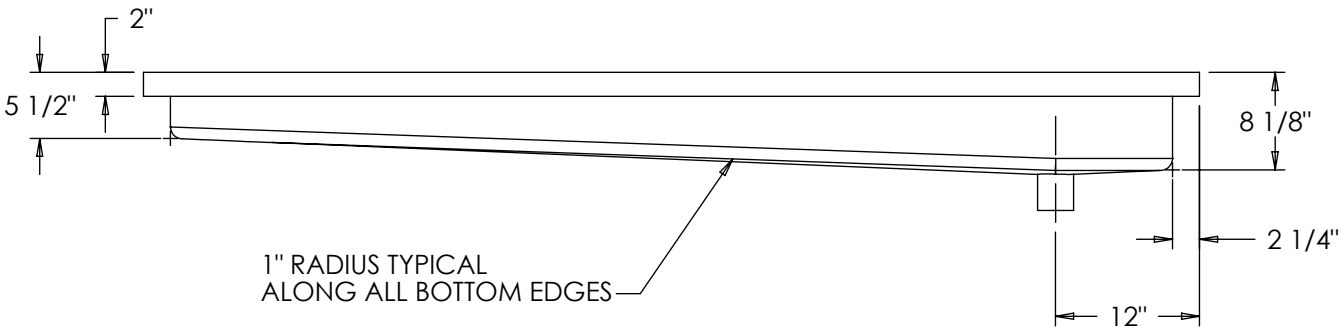

SIDE VIEW

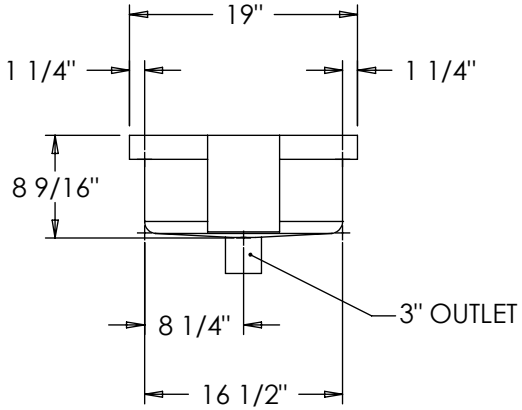

END VIEW (DRAIN)

NOTE:
1) 1/4" RADIUS TYPICAL UNLESS OTHERWISE NOTED.

ELKHART PLASTICS CLAIMS PROPRIETARY RIGHTS IN THE MATERIAL DISCLOSED HEREON. NEITHER THIS DRAWING NOR ANY PRODUCTION THEREOF MAY BE USED TO MANUFACTURE ANYTHING SHOWN HEREON WITHOUT PERMISSION IN WRITING FROM ELKHART PLASTICS TO USER SPECIFICALLY REFERRING TO THIS DRAWING.

ELKHART PLASTICS
MIDDLEBURY
51703 PACKARD DRIVE
MIDDLEBURY, INDIANA 46540

TITLE:

41 GALLON HOLDING TANK

PART NO. **3020**

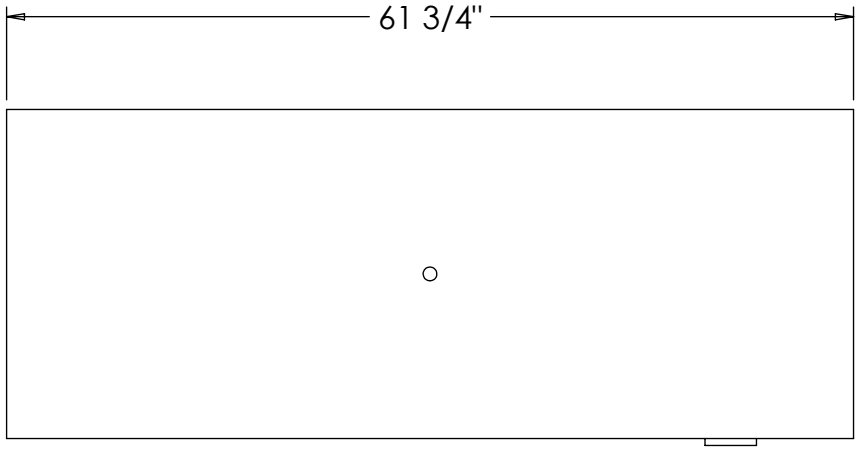

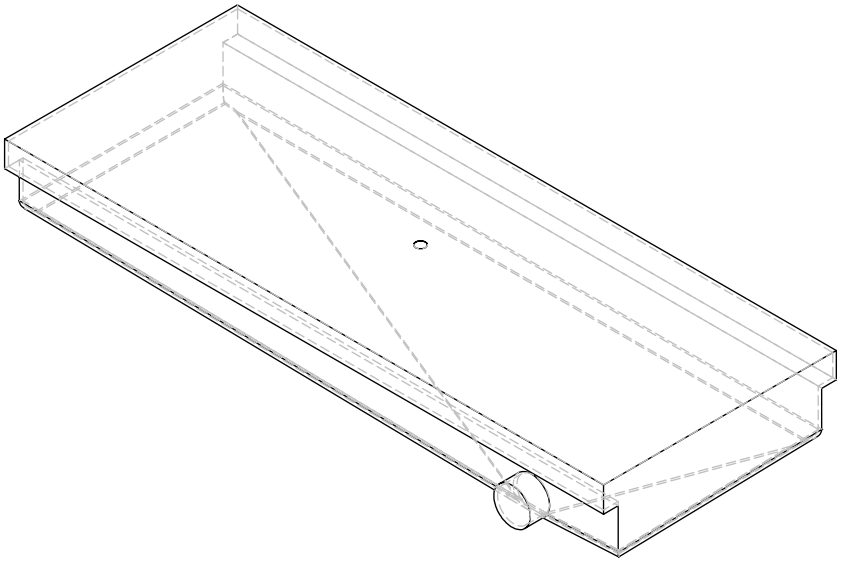

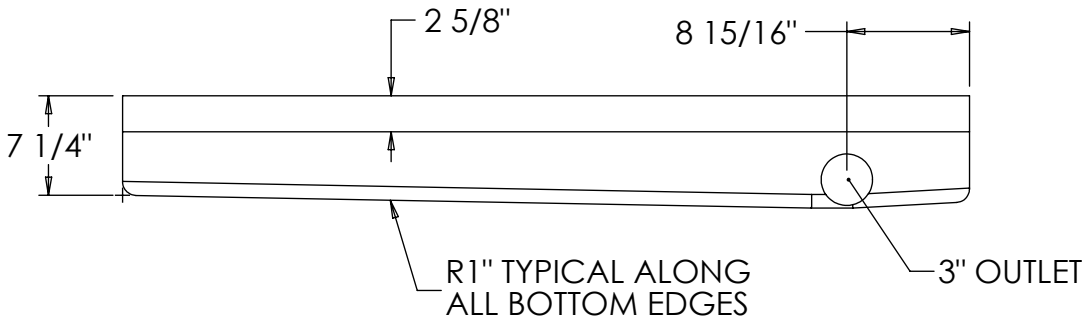

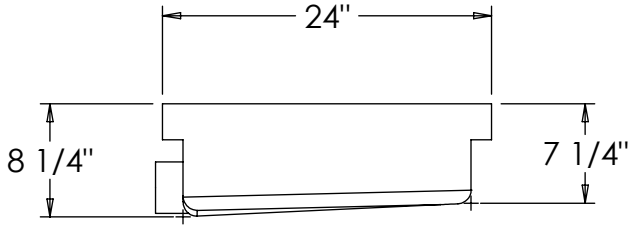

ELKHART PLASTICS CLAIMS PROPRIETARY RIGHTS IN THE MATERIAL DISCLOSED HEREON. NEITHER THIS DRAWING NOR ANY PRODUCTION THEREOF MAY BE USED TO MANUFACTURE ANYTHING SHOWN HEREON WITHOUT PERMISSION IN WRITING FROM ELKHART PLASTICS TO USER SPECIFICALLY REFERRING TO THIS DRAWING.

ELKHART PLASTICS
MIDDLEBURY
51703 PACKARD DRIVE
MIDDLEBURY, INDIANA 46540

TITLE:

41 GALLON HOLDING TANK

PART NO. **3021**

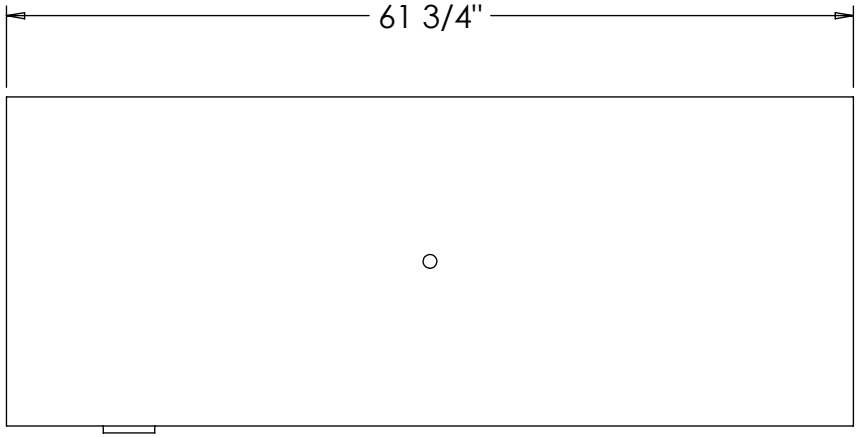

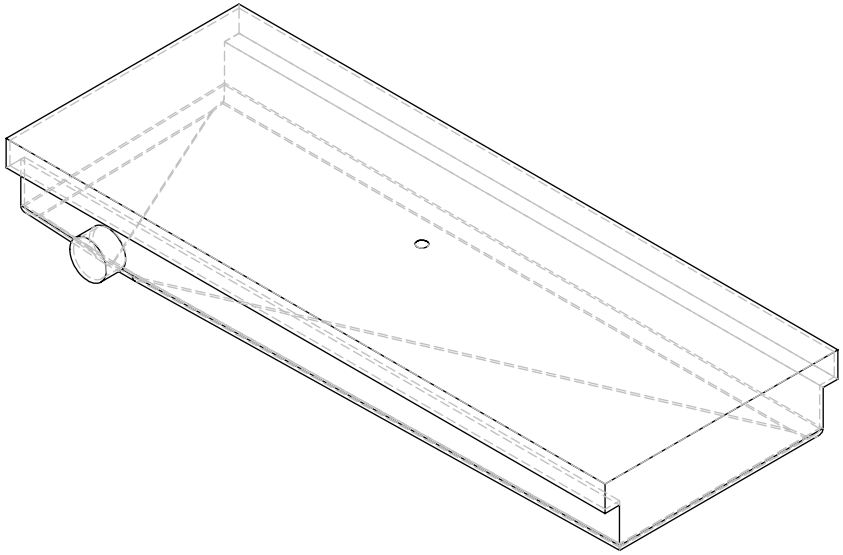

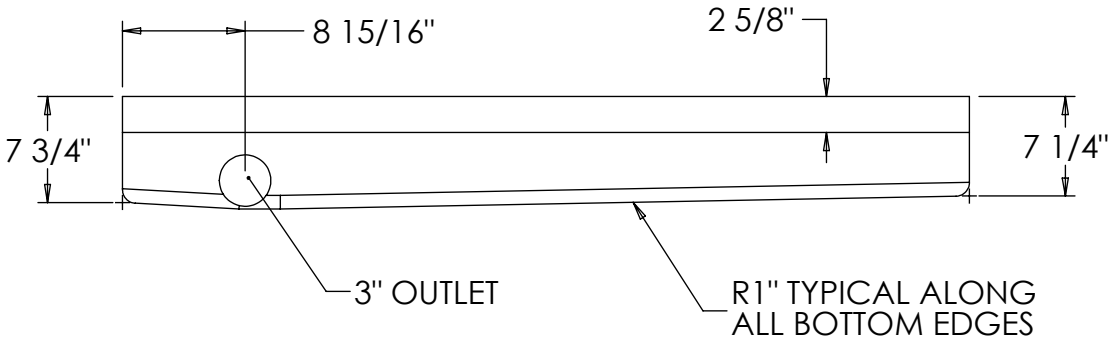

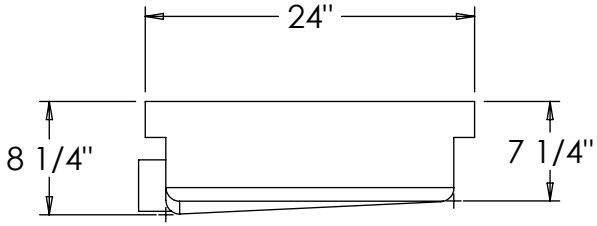

ELKHART PLASTICS CLAIMS PROPRIETARY RIGHTS IN THE MATERIAL DISCLOSED HEREON. NEITHER THIS DRAWING NOR ANY PRODUCTION THEREOF MAY BE USED TO MANUFACTURE ANYTHING SHOWN HEREON WITHOUT PERMISSION IN WRITING FROM ELKHART PLASTICS TO USER SPECIFICALLY REFERRING TO THIS DRAWING.

ELKHART PLASTICS
MIDDLEBURY
51703 PACKARD DRIVE
MIDDLEBURY, INDIANA 46540

TITLE:

41 GALLON HOLDING TANK

PART NO. **4327**

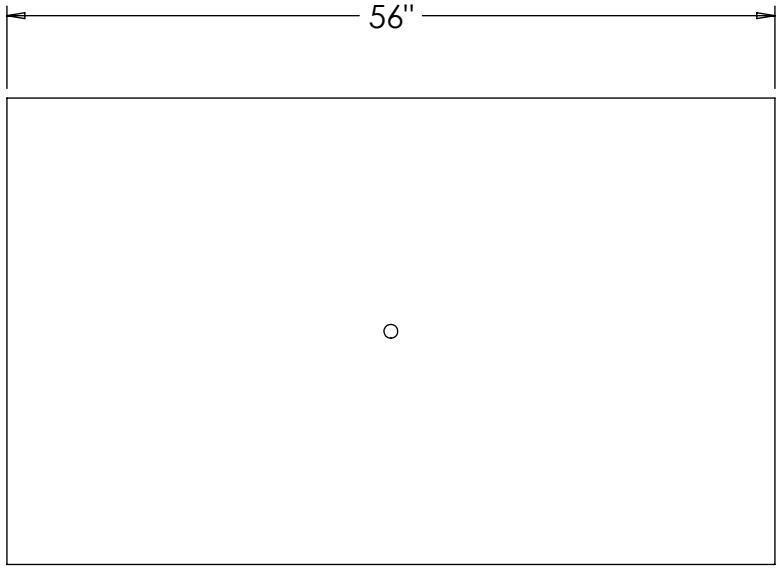

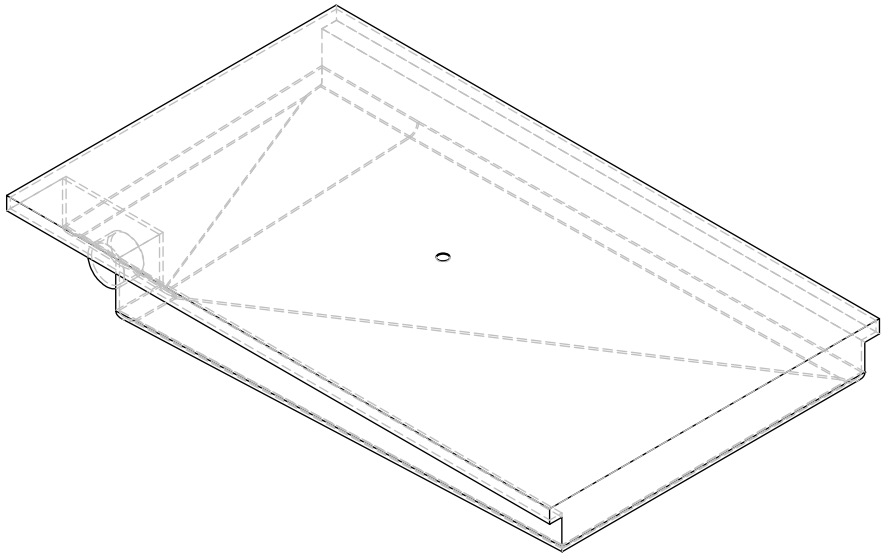

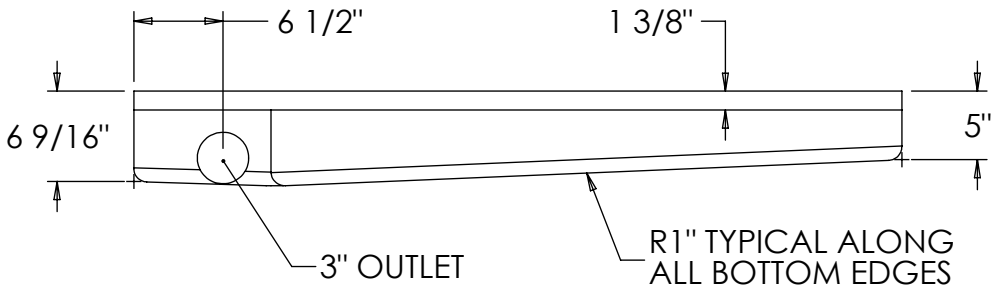

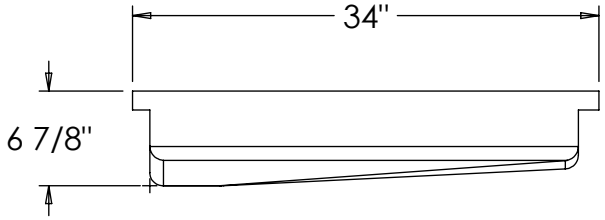

ELKHART PLASTICS CLAIMS PROPRIETARY RIGHTS IN THE MATERIAL DISCLOSED HEREON. NEITHER THIS DRAWING NOR ANY PRODUCTION THEREOF MAY BE USED TO MANUFACTURE ANYTHING SHOWN HEREON WITHOUT PERMISSION IN WRITING FROM ELKHART PLASTICS TO USER SPECIFICALLY REFERRING TO THIS DRAWING.

ELKHART PLASTICS
MIDDLEBURY
51703 PACKARD DRIVE
MIDDLEBURY, INDIANA 46540

TITLE:

41 GALLON HOLDING TANK

PART NO. **4328**

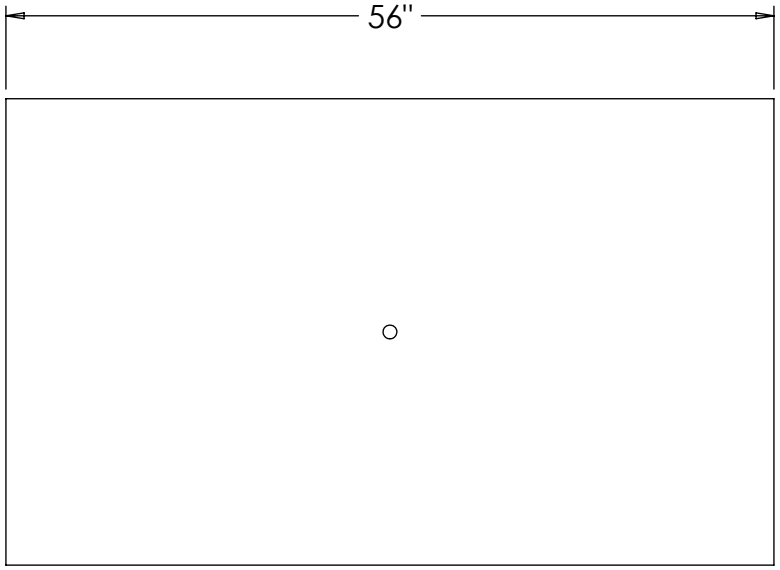

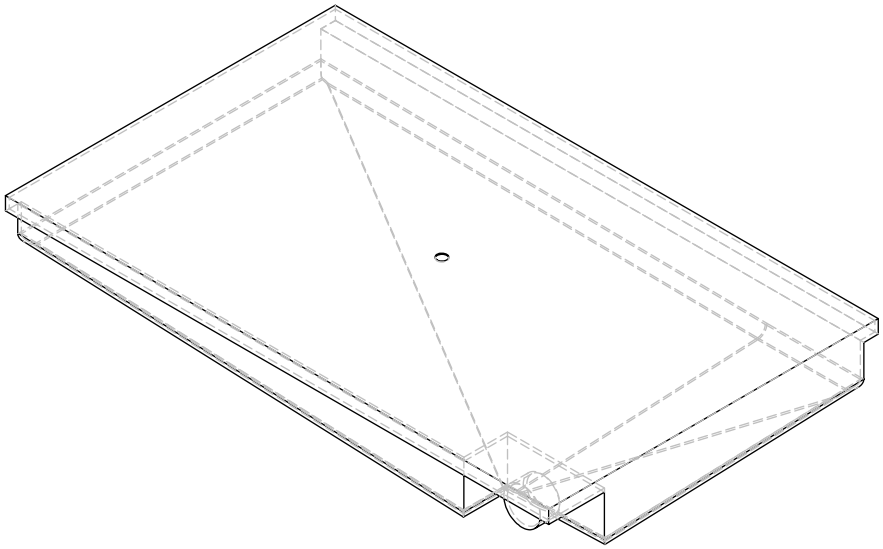

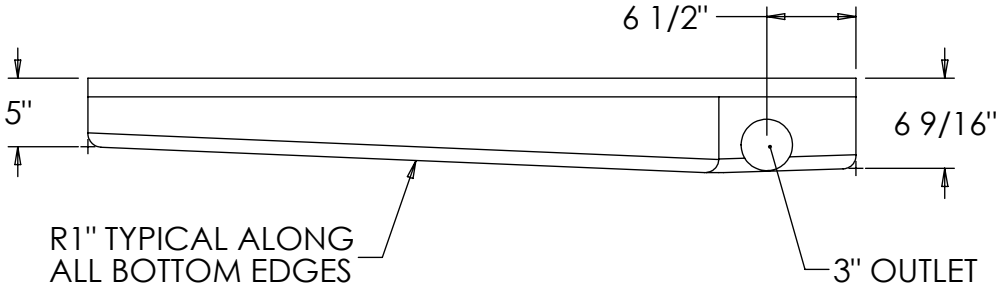

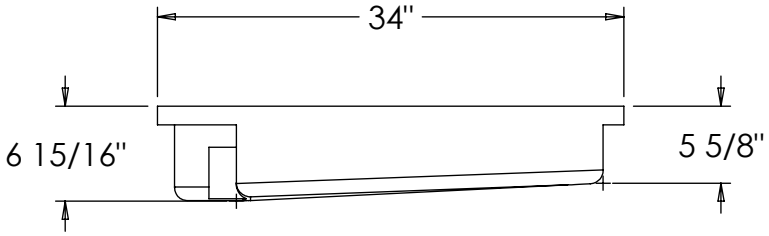

ELKHART PLASTICS CLAIMS PROPRIETARY RIGHTS IN THE MATERIAL DISCLOSED HEREON. NEITHER THIS DRAWING NOR ANY PRODUCTION THEREOF MAY BE USED TO MANUFACTURE ANYTHING SHOWN HEREON WITHOUT PERMISSION IN WRITING FROM ELKHART PLASTICS TO USER SPECIFICALLY REFERRING TO THIS DRAWING.

ELKHART PLASTICS
MIDDLEBURY
51703 PACKARD DRIVE
MIDDLEBURY, INDIANA 46540

TITLE:

41 GALLON HOLDING TANK

PART NO. **2392**

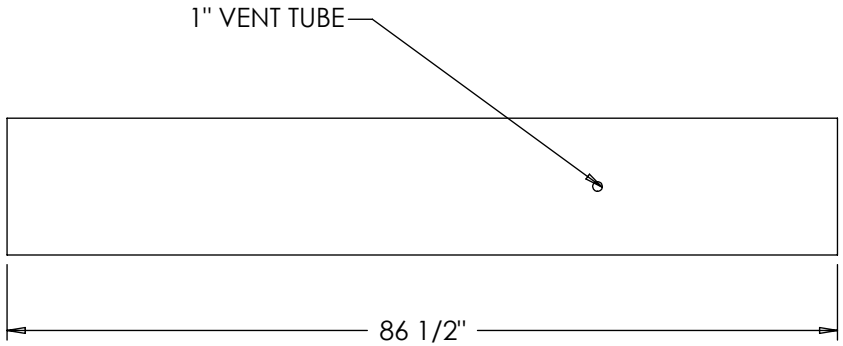

TOP VIEW

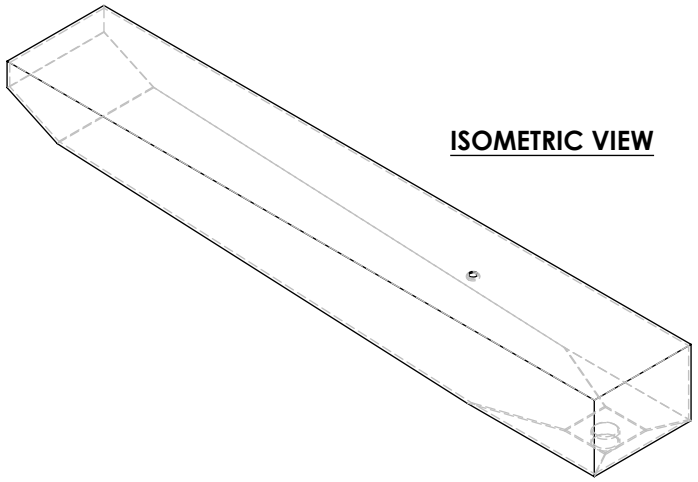

ISOMETRIC VIEW

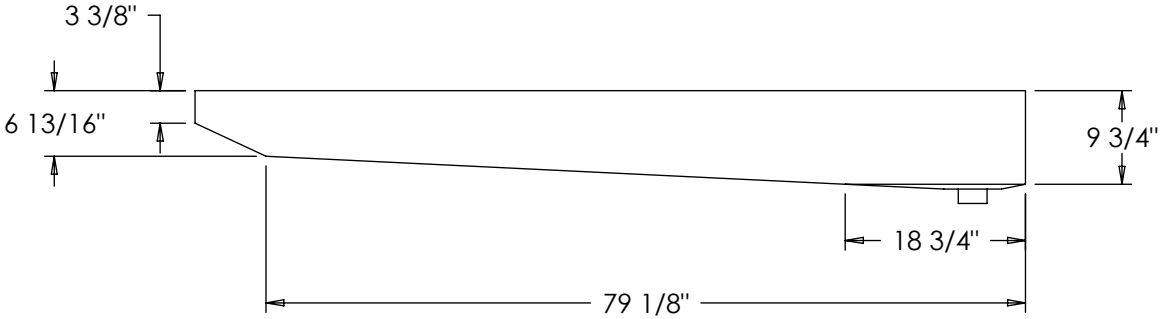

SIDE VIEW

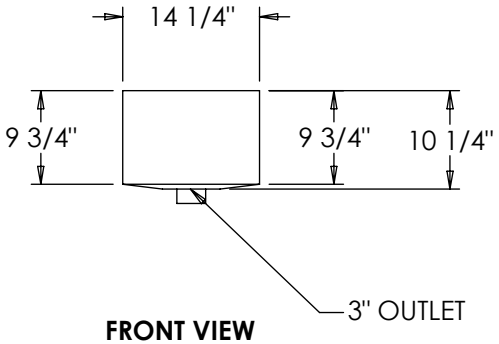

FRONT VIEW

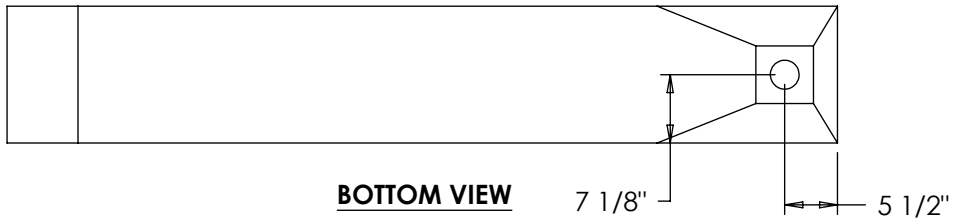

BOTTOM VIEW

ELKHART PLASTICS CLAIMS PROPRIETARY RIGHTS IN THE MATERIAL DISCLOSED HEREON. NEITHER THIS DRAWING NOR ANY PRODUCTION THEREOF MAY BE USED TO MANUFACTURE ANYTHING SHOWN HEREON WITHOUT PERMISSION IN WRITING FROM ELKHART PLASTICS TO USER SPECIFICALLY REFERRING TO THIS DRAWING.

NOTES:
R1/4" TYP UNLESS STATED OTHERWISE

ELKHART PLASTICS
MIDDLEBURY
51703 PACKARD DRIVE
MIDDLEBURY, INDIANA 46540

TITLE:

41.5 GALLON HOLDING TANK

PART NO. **116H**

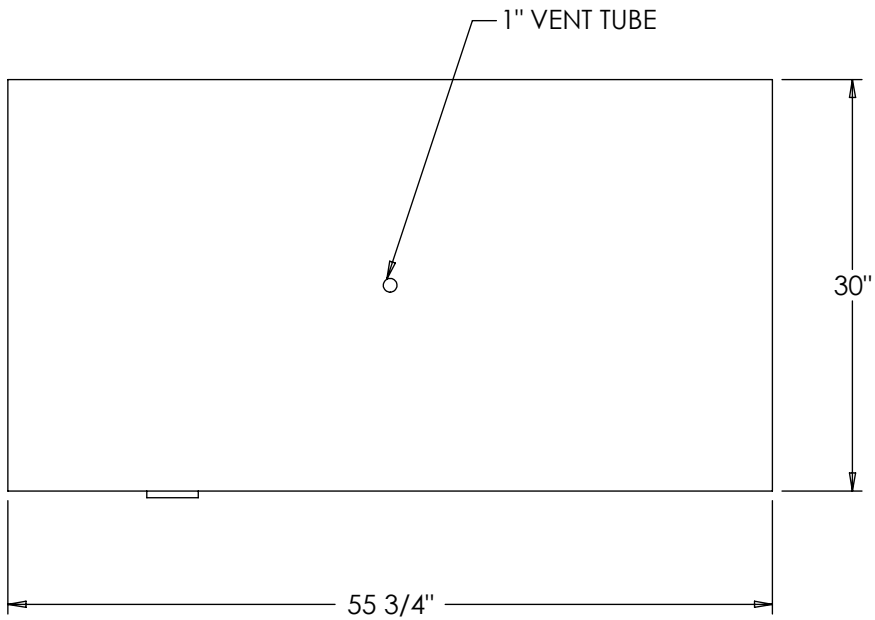

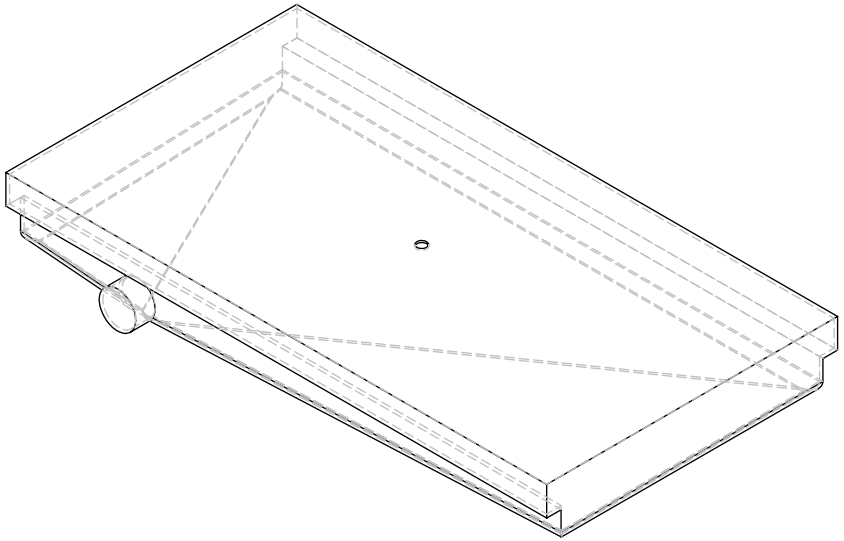

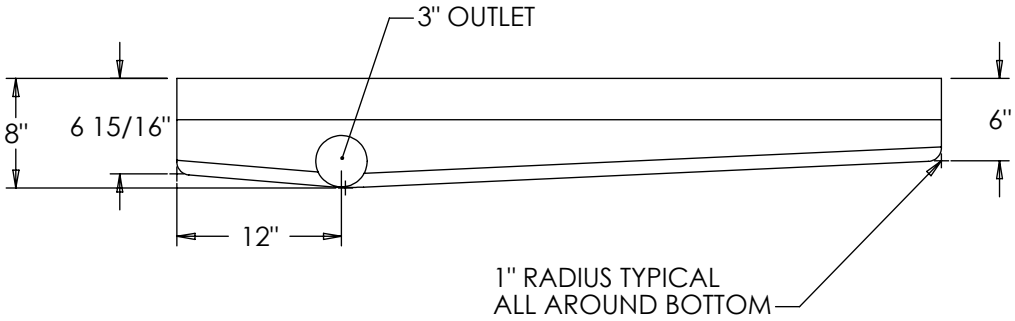

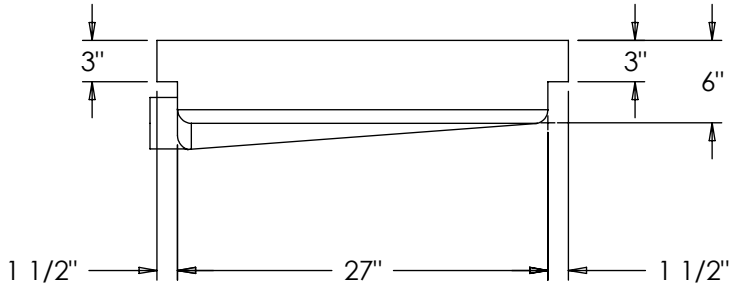

NOTE:
1) 1/4" RADIUS TYPICAL UNLESS OTHERWISE NOTED.

ELKHART PLASTICS CLAIMS PROPRIETARY RIGHTS IN THE MATERIAL DISCLOSED HEREON. NEITHER THIS DRAWING NOR ANY PRODUCTION THEREOF MAY BE USED TO MANUFACTURE ANYTHING SHOWN HEREON WITHOUT PERMISSION IN WRITING FROM ELKHART PLASTICS TO USER SPECIFICALLY REFERRING TO THIS DRAWING.

ELKHART PLASTICS
MIDDLEBURY
51703 PACKARD DRIVE
MIDDLEBURY, INDIANA 46540

TITLE:

42 GALLON HOLDING TANK

PART NO. **366H**

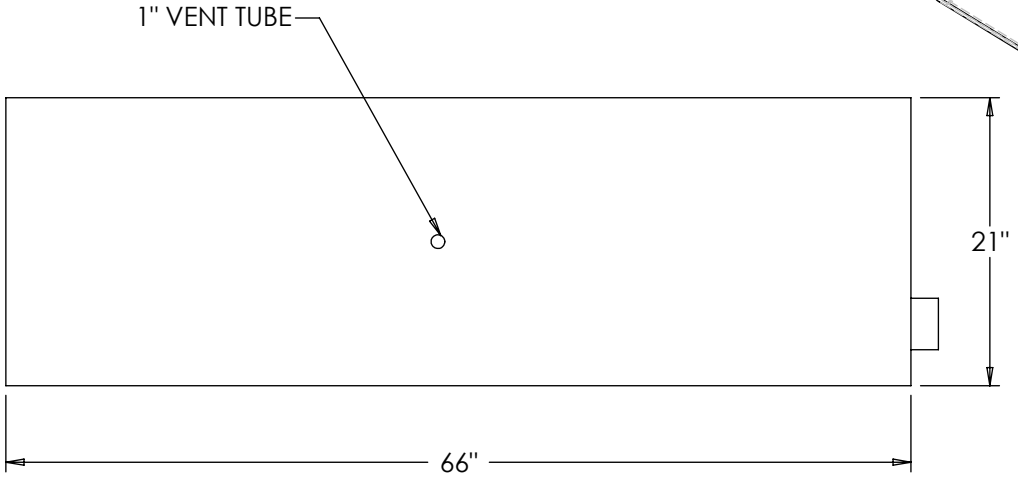

TOP VIEW

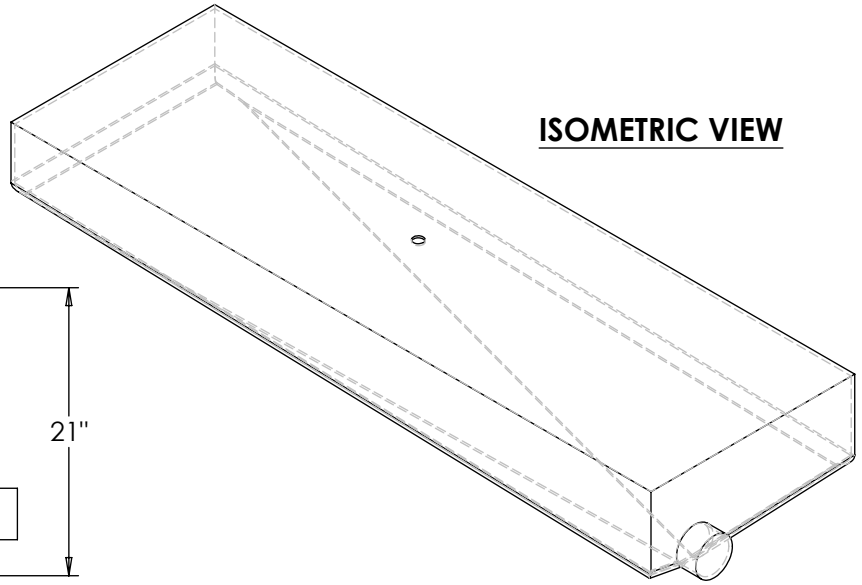

ISOMETRIC VIEW

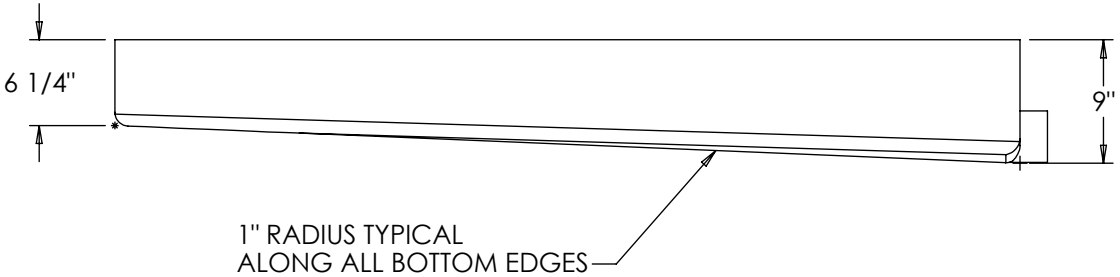

SIDE VIEW

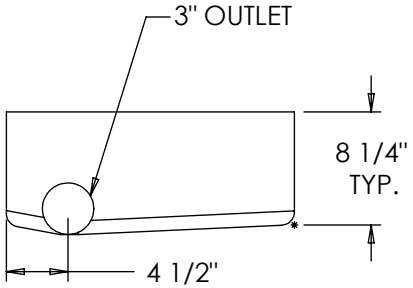

FRONT VIEW

ELKHART PLASTICS CLAIMS PROPRIETARY RIGHTS IN THE MATERIAL DISCLOSED HEREON. NEITHER THIS DRAWING NOR ANY PRODUCTION THEREOF MAY BE USED TO MANUFACTURE ANYTHING SHOWN HEREON WITHOUT PERMISSION IN WRITING FROM ELKHART PLASTICS TO USER SPECIFICALLY REFERRING TO THIS DRAWING.

NOTE:
1) 1/4" RADIUS TYPICAL UNLESS OTHERWISE NOTED.

ELKHART PLASTICS
MIDDLEBURY
51703 PACKARD DRIVE
MIDDLEBURY, INDIANA 46540

TITLE:

42 GALLON HOLDING TANK

PART NO. **438H**

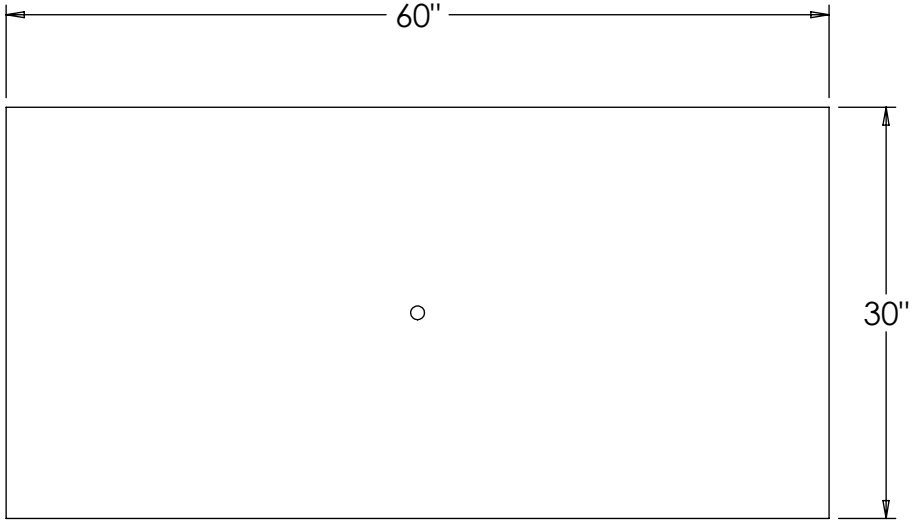

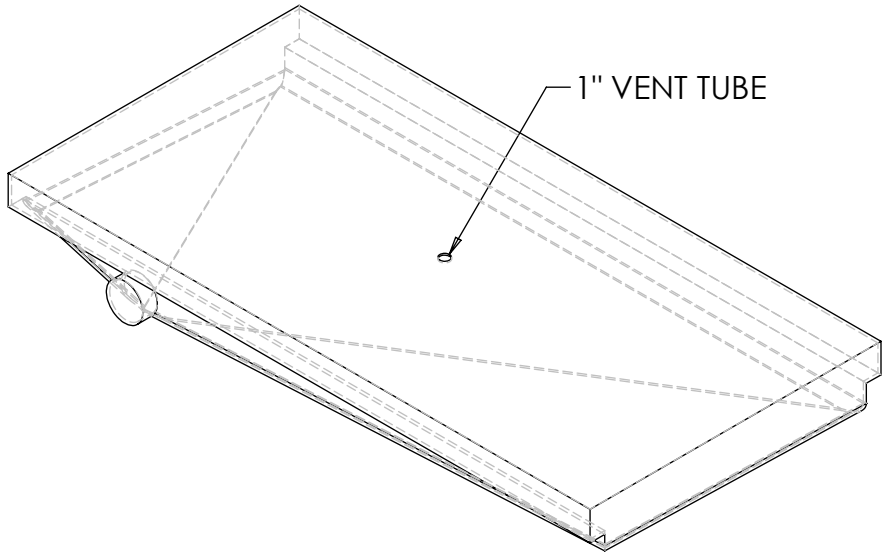

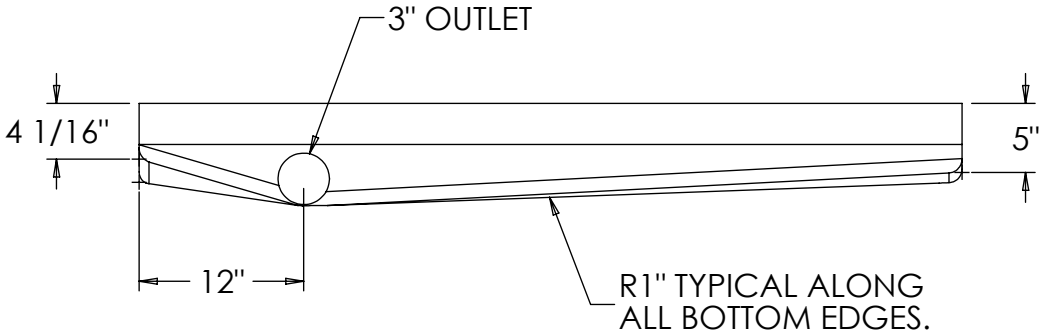

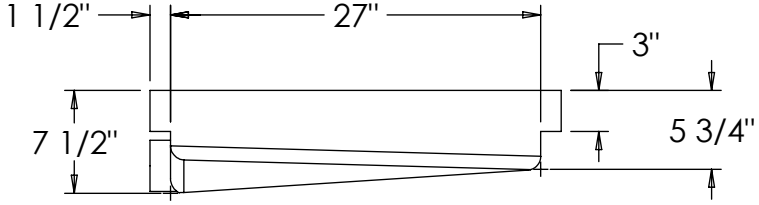

NOTE:
1) UNLESS SPECIFIED, R1/4" TYPICAL.

ELKHART PLASTICS CLAIMS PROPRIETARY RIGHTS IN THE MATERIAL DISCLOSED HEREON. NEITHER THIS DRAWING NOR ANY PRODUCTION THEREOF MAY BE USED TO MANUFACTURE ANYTHING SHOWN HEREON WITHOUT PERMISSION IN WRITING FROM ELKHART PLASTICS TO USER SPECIFICALLY REFERRING TO THIS DRAWING.

ELKHART PLASTICS
MIDDLEBURY
51703 PACKARD DRIVE
MIDDLEBURY, INDIANA 46540

TITLE:

42 GALLON HOLDING TANK

PART NO. **4260**

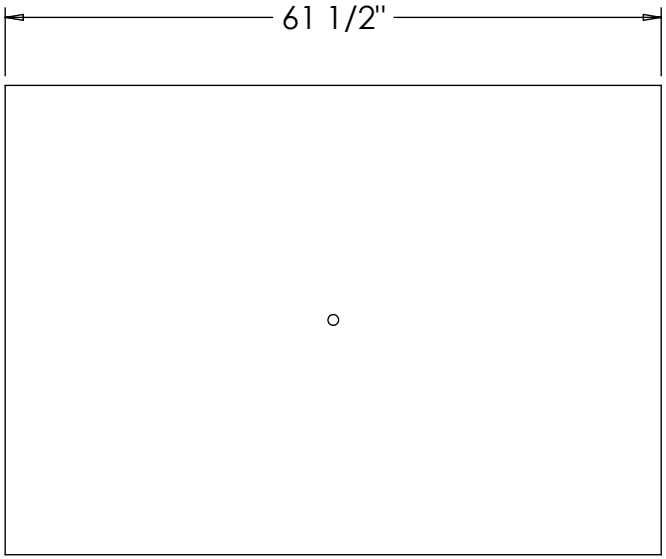

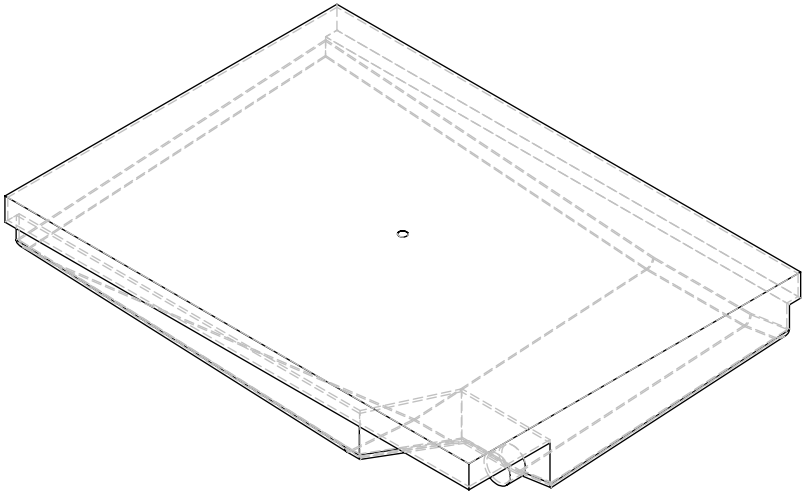

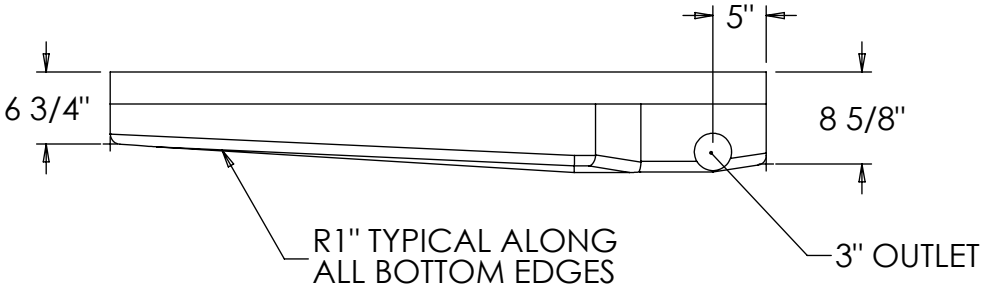

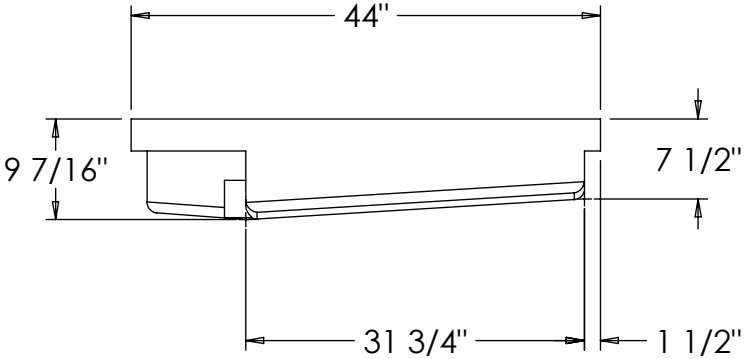

ELKHART PLASTICS CLAIMS PROPRIETARY RIGHTS IN THE MATERIAL DISCLOSED HEREON. NEITHER THIS DRAWING NOR ANY PRODUCTION THEREOF MAY BE USED TO MANUFACTURE ANYTHING SHOWN HEREON WITHOUT PERMISSION IN WRITING FROM ELKHART PLASTICS TO USER SPECIFICALLY REFERRING TO THIS DRAWING.

ELKHART PLASTICS
MIDDLEBURY
51703 PACKARD DRIVE
MIDDLEBURY, INDIANA 46540

TITLE:

42 GALLON HOLDING TANK

PART NO. **4429**

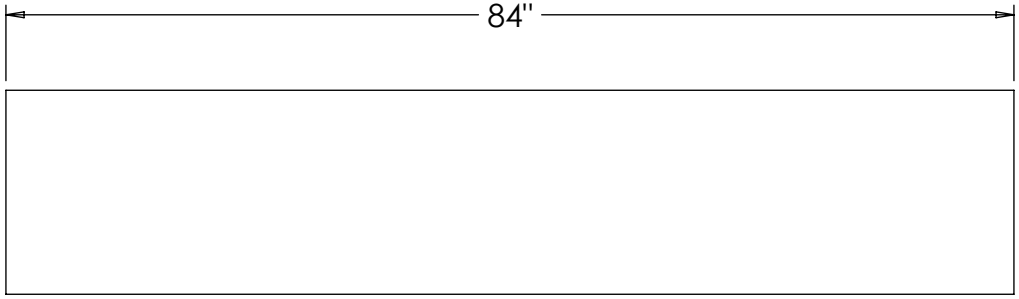

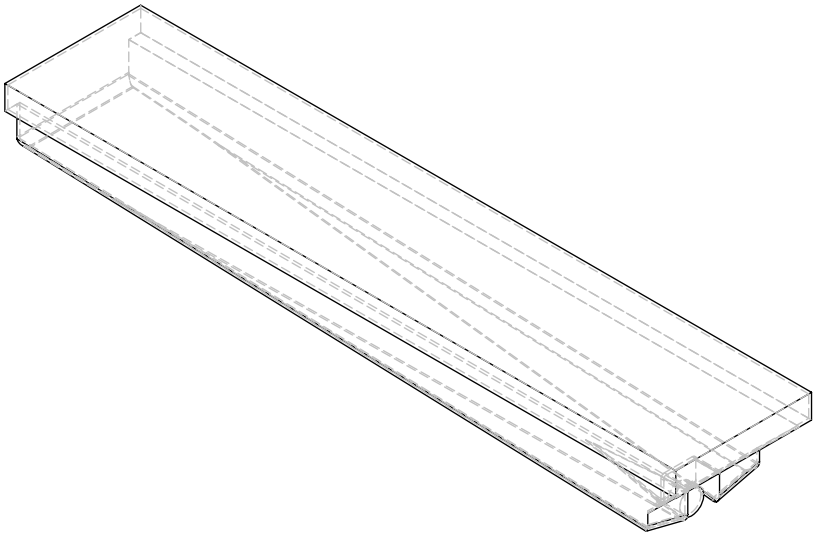

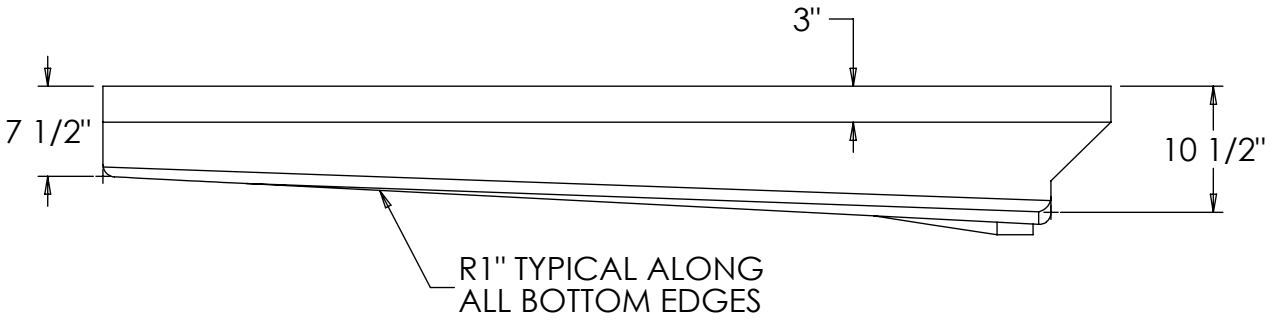

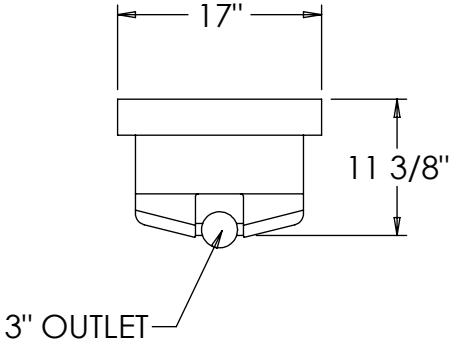

ELKHART PLASTICS CLAIMS PROPRIETARY RIGHTS IN THE MATERIAL DISCLOSED HEREON. NEITHER THIS DRAWING NOR ANY PRODUCTION THEREOF MAY BE USED TO MANUFACTURE ANYTHING SHOWN HEREON WITHOUT PERMISSION IN WRITING FROM ELKHART PLASTICS TO USER SPECIFICALLY REFERRING TO THIS DRAWING.

ELKHART PLASTICS
MIDDLEBURY
51703 PACKARD DRIVE
MIDDLEBURY, INDIANA 46540

TITLE:

42 GALLON HOLDING TANK

PART NO. **4430**

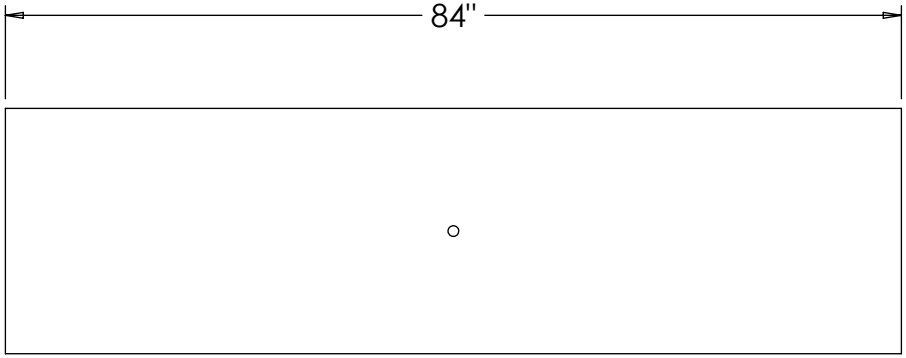

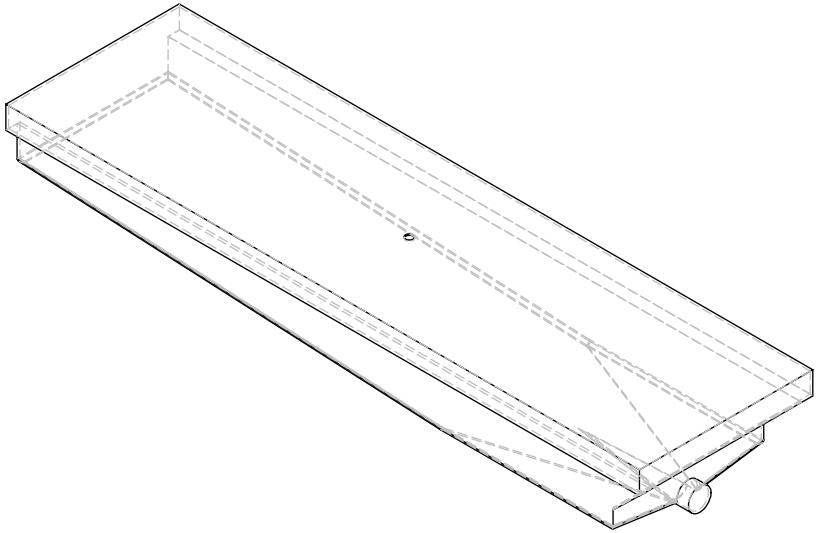

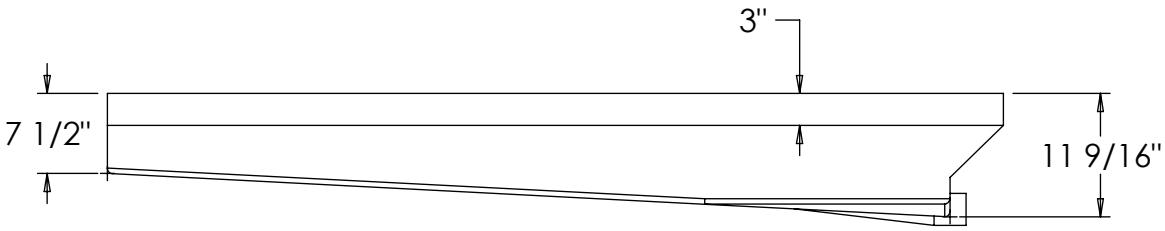

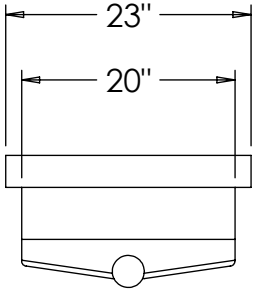

ELKHART PLASTICS CLAIMS PROPRIETARY RIGHTS IN THE MATERIAL DISCLOSED HEREON. NEITHER THIS DRAWING NOR ANY PRODUCTION THEREOF MAY BE USED TO MANUFACTURE ANYTHING SHOWN HEREON WITHOUT PERMISSION IN WRITING FROM ELKHART PLASTICS TO USER SPECIFICALLY REFERRING TO THIS DRAWING.

ELKHART PLASTICS
MIDDLEBURY
51703 PACKARD DRIVE
MIDDLEBURY, INDIANA 46540

TITLE:

42 GALLON HOLDING TANK

PART NO. **4451**

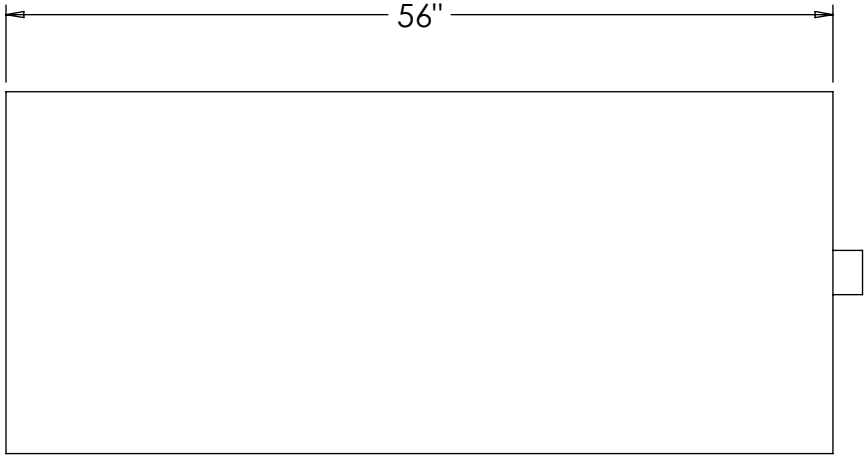

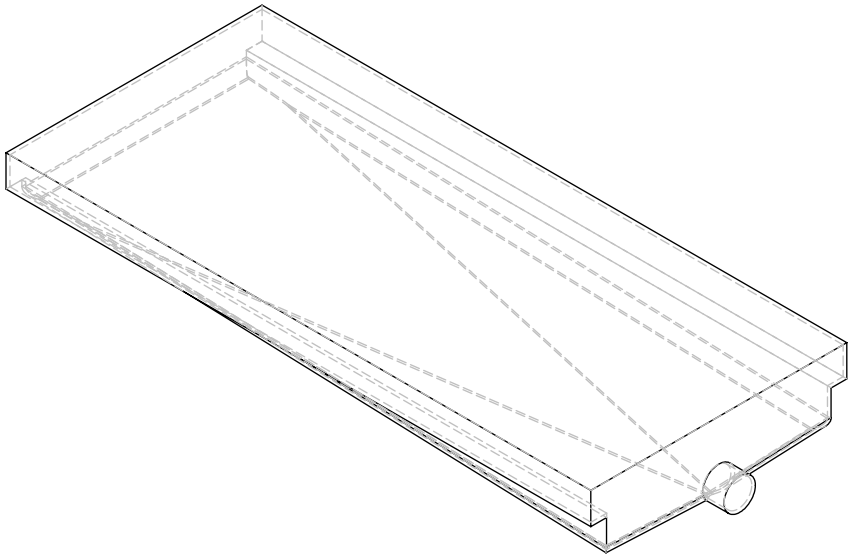

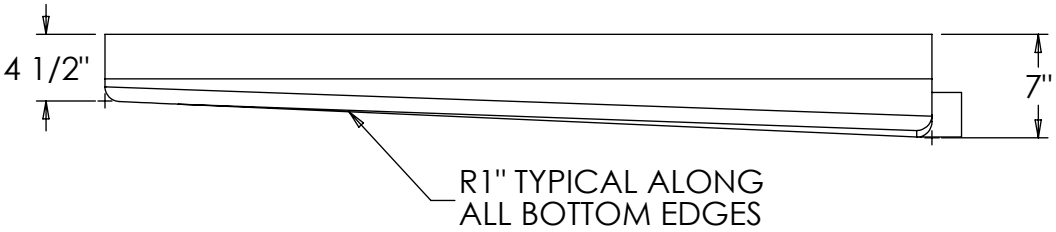

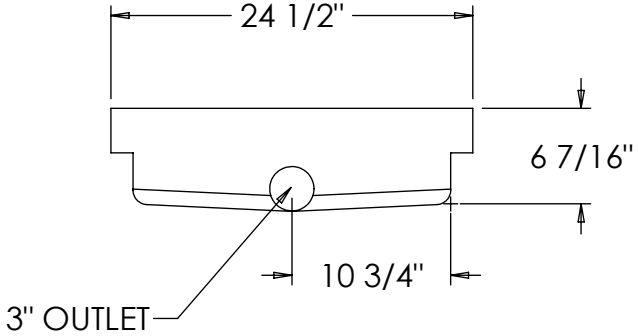

ELKHART PLASTICS CLAIMS PROPRIETARY RIGHTS IN THE MATERIAL DISCLOSED HEREON. NEITHER THIS DRAWING NOR ANY PRODUCTION THEREOF MAY BE USED TO MANUFACTURE ANYTHING SHOWN HEREON WITHOUT PERMISSION IN WRITING FROM ELKHART PLASTICS TO USER SPECIFICALLY REFERRING TO THIS DRAWING.

ELKHART PLASTICS
MIDDLEBURY
51703 PACKARD DRIVE
MIDDLEBURY, INDIANA 46540

TITLE:

42 GALLON HOLDING TANK

PART NO. **4471**

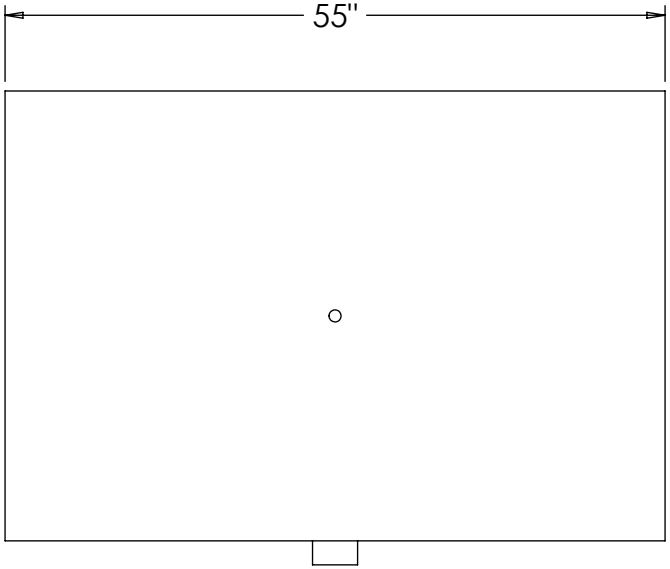

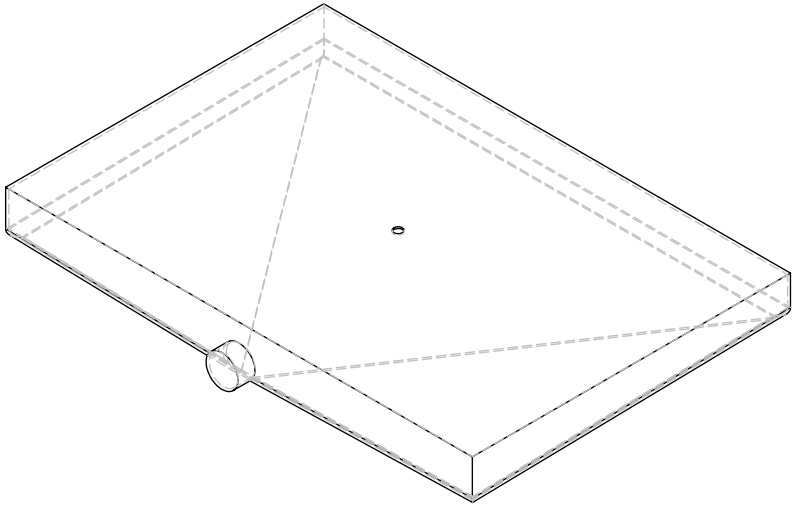

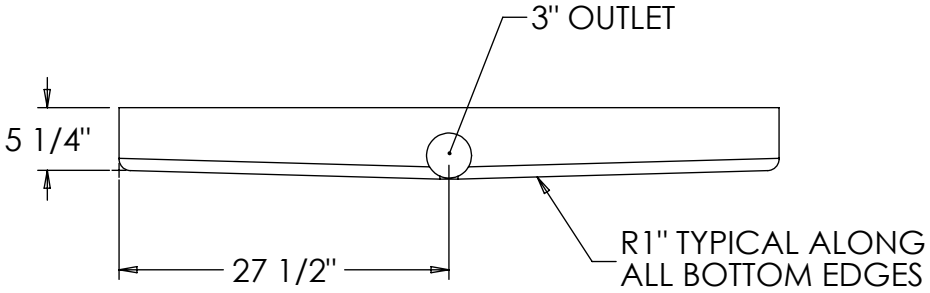

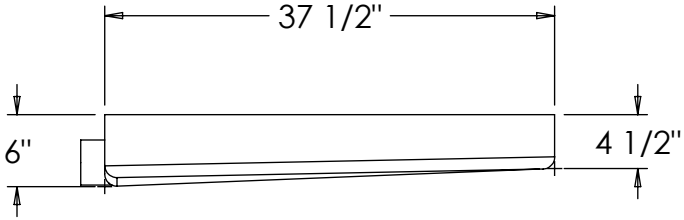

ELKHART PLASTICS CLAIMS PROPRIETARY RIGHTS IN THE MATERIAL DISCLOSED HEREON. NEITHER THIS DRAWING NOR ANY PRODUCTION THEREOF MAY BE USED TO MANUFACTURE ANYTHING SHOWN HEREON WITHOUT PERMISSION IN WRITING FROM ELKHART PLASTICS TO USER SPECIFICALLY REFERRING TO THIS DRAWING.

ELKHART PLASTICS
MIDDLEBURY
51703 PACKARD DRIVE
MIDDLEBURY, INDIANA 46540

TITLE:

42 GALLON HOLDING TANK

PART NO. **3389**

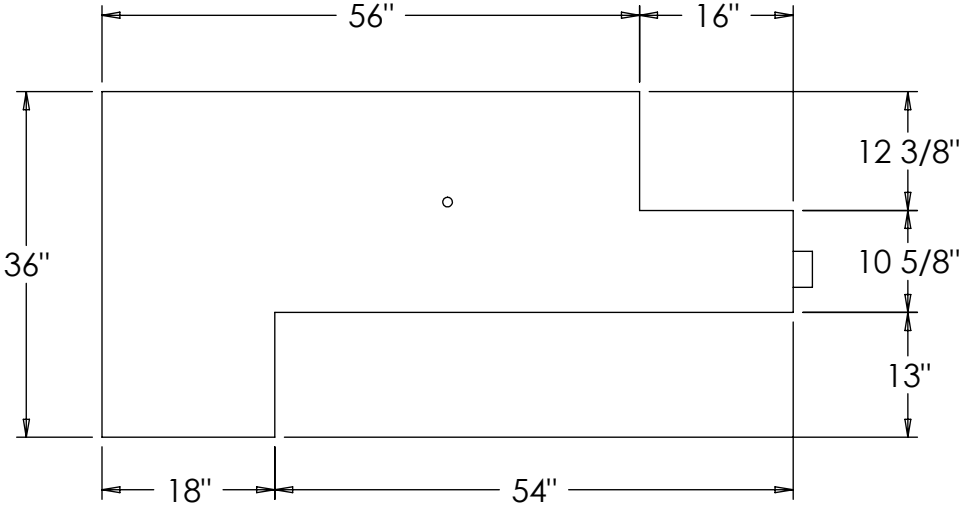

TOP VIEW

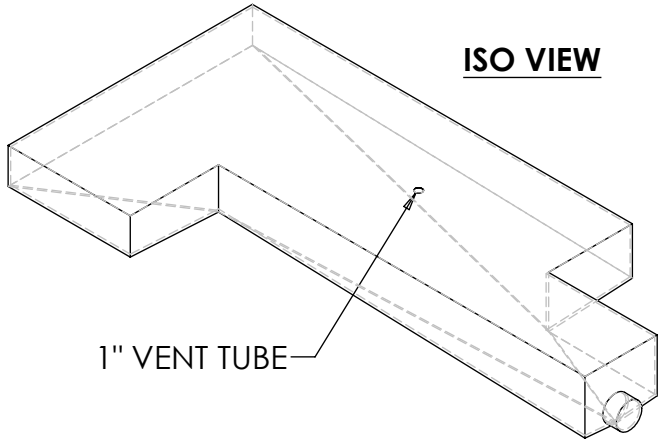

ISO VIEW

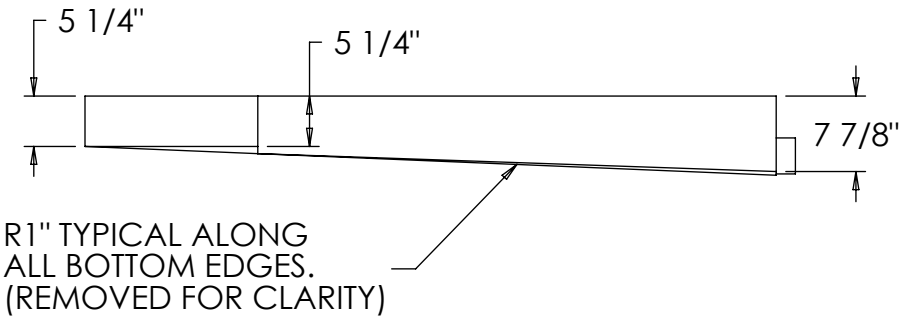

FRONT VIEW

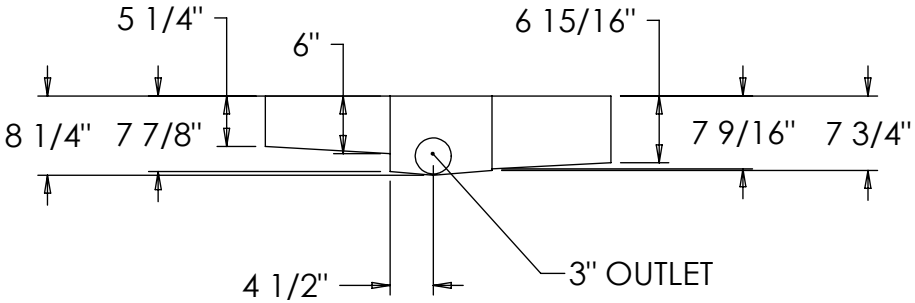

RIGHT VIEW

NOTE:
1) UNLESS SPECIFIED, R1/4" TYPICAL.

ELKHART PLASTICS CLAIMS PROPRIETARY RIGHTS IN THE MATERIAL DISCLOSED HEREON. NEITHER THIS DRAWING NOR ANY PRODUCTION THEREOF MAY BE USED TO MANUFACTURE ANYTHING SHOWN HEREON WITHOUT PERMISSION IN WRITING FROM ELKHART PLASTICS TO USER SPECIFICALLY REFERRING TO THIS DRAWING.

ELKHART PLASTICS
MIDDLEBURY
51703 PACKARD DRIVE
MIDDLEBURY, INDIANA 46540

TITLE:

43 GALLON HOLDING TANK

PART NO. **4344**

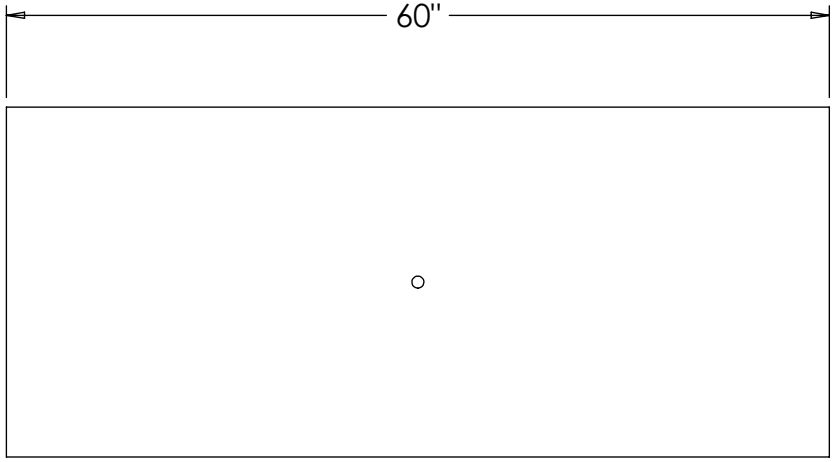

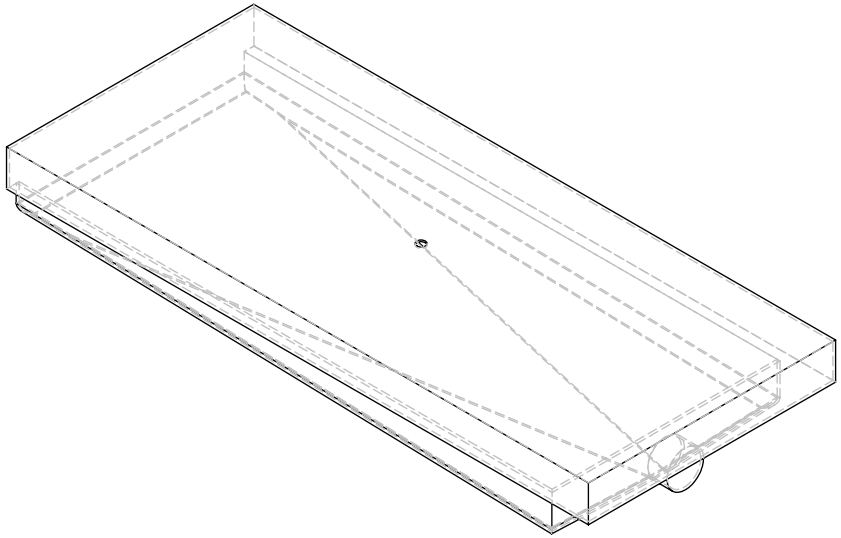

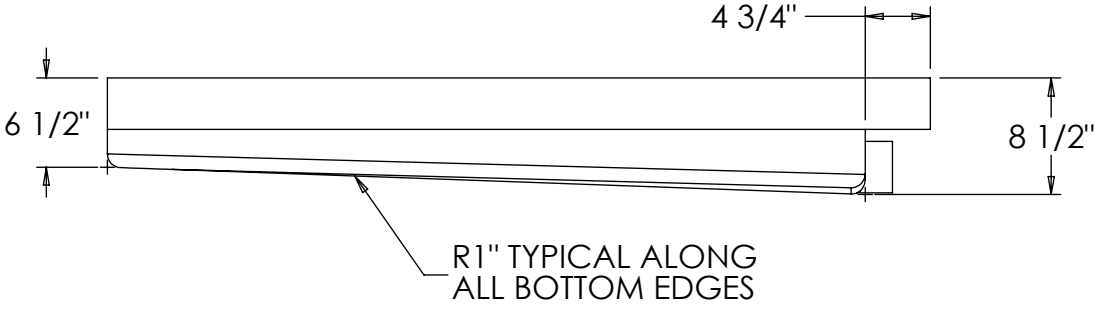

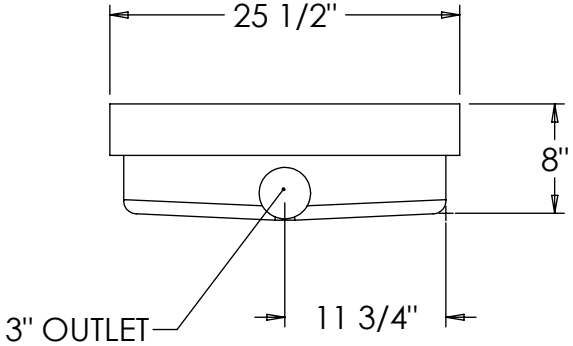

ELKHART PLASTICS CLAIMS PROPRIETARY RIGHTS IN THE MATERIAL DISCLOSED HEREON. NEITHER THIS DRAWING NOR ANY PRODUCTION THEREOF MAY BE USED TO MANUFACTURE ANYTHING SHOWN HEREON WITHOUT PERMISSION IN WRITING FROM ELKHART PLASTICS TO USER SPECIFICALLY REFERRING TO THIS DRAWING.

ELKHART PLASTICS
MIDDLEBURY
51703 PACKARD DRIVE
MIDDLEBURY, INDIANA 46540

TITLE:

43 GALLON HOLDING TANK

PART NO. **103H**

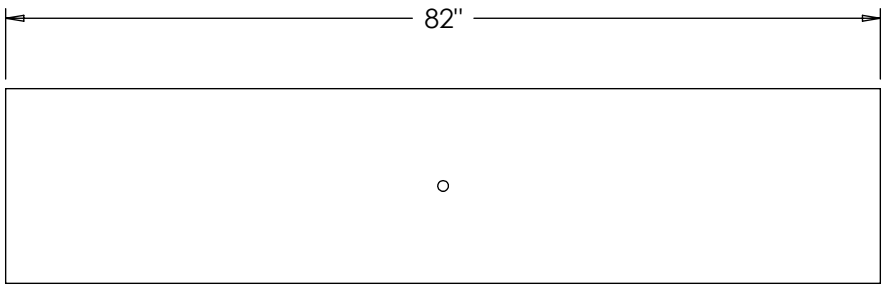

TOP VIEW

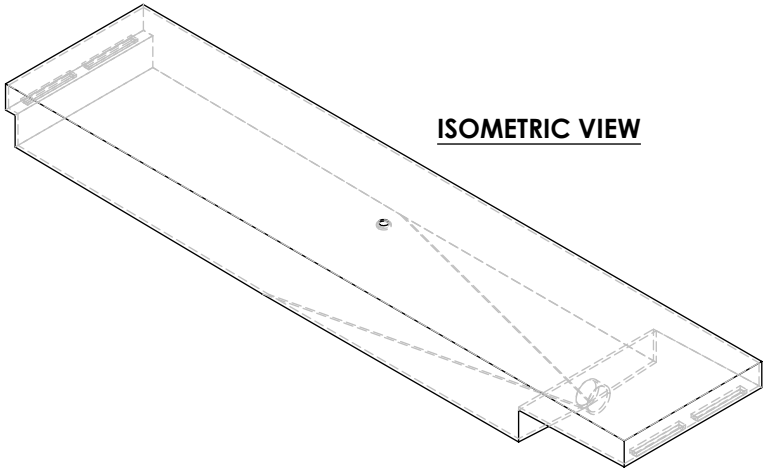

ISOMETRIC VIEW

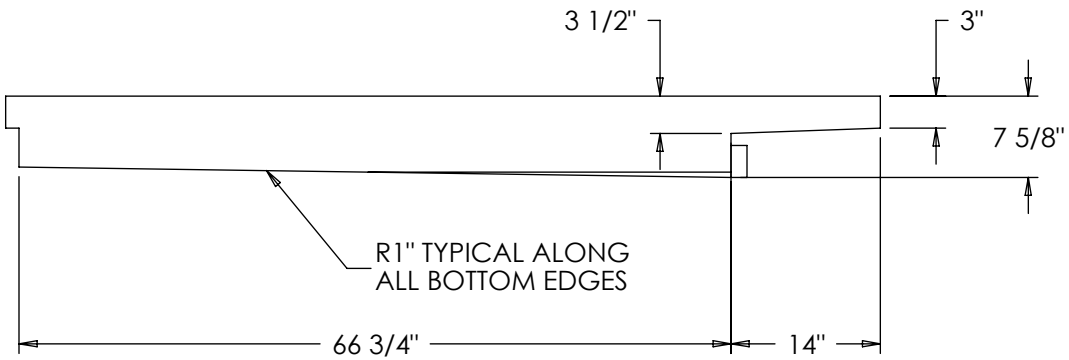

SIDE VIEW

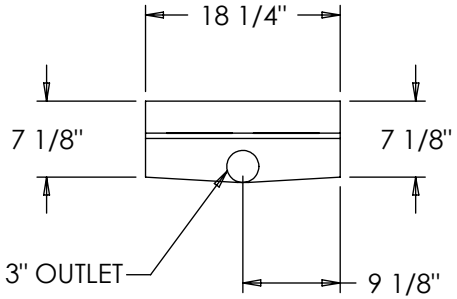

FRONT VIEW

ELKHART PLASTICS CLAIMS PROPRIETARY RIGHTS IN THE MATERIAL DISCLOSED HEREON. NEITHER THIS DRAWING NOR ANY PRODUCTION THEREOF MAY BE USED TO MANUFACTURE ANYTHING SHOWN HEREON WITHOUT PERMISSION IN WRITING FROM ELKHART PLASTICS TO USER SPECIFICALLY REFERRING TO THIS DRAWING.

NOTES:
R1/4" TYP UNLESS STATED OTHERWISE
ENTIRE BOTTOM SURFACE R1" TYP

ELKHART PLASTICS
MIDDLEBURY
51703 PACKARD DRIVE
MIDDLEBURY, INDIANA 46540

TITLE:

44 GALLON HOLDING TANK

PART NO. **1950**

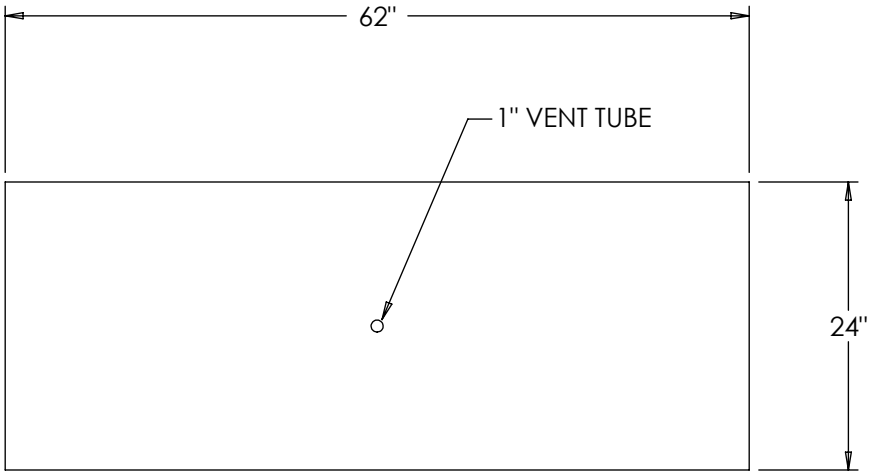

TOP VIEW

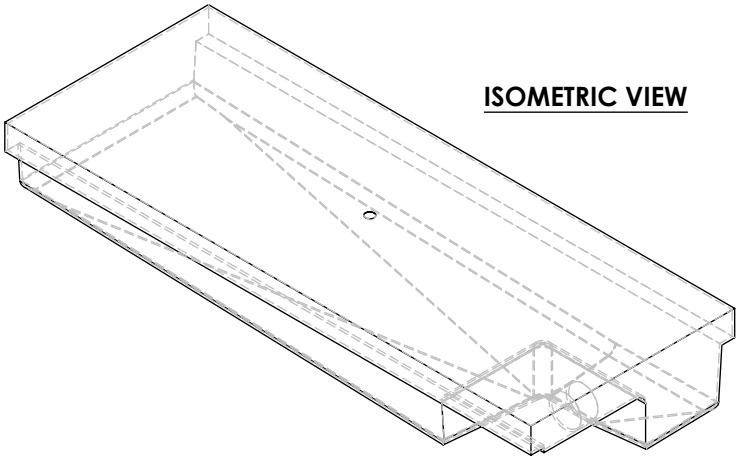

ISOMETRIC VIEW

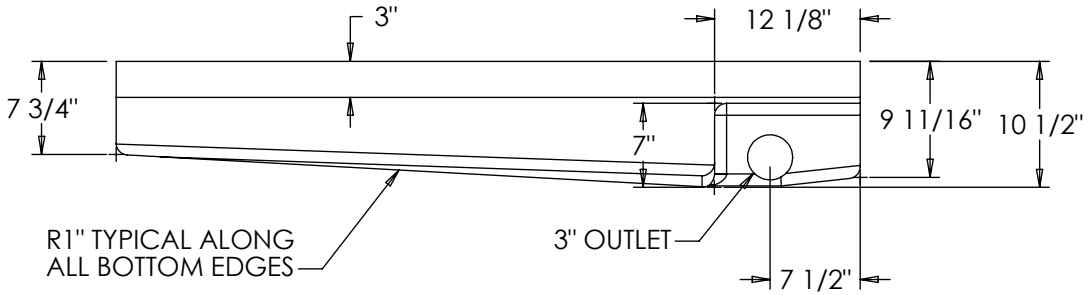

FRONT VIEW

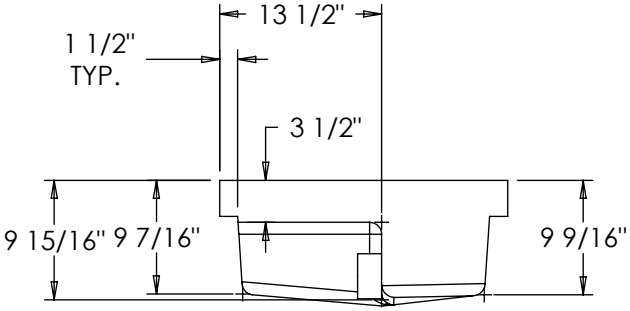

RIGHT VIEW

NOTE:
1) UNLESS SPECIFIED, R1/4" TYPICAL.

ELKHART PLASTICS CLAIMS PROPRIETARY RIGHTS IN THE MATERIAL DISCLOSED HEREON. NEITHER THIS DRAWING NOR ANY PRODUCTION THEREOF MAY BE USED TO MANUFACTURE ANYTHING SHOWN HEREON WITHOUT PERMISSION IN WRITING FROM ELKHART PLASTICS TO USER SPECIFICALLY REFERRING TO THIS DRAWING.

ELKHART PLASTICS
MIDDLEBURY
51703 PACKARD DRIVE
MIDDLEBURY, INDIANA 46540

TITLE:

45 GALLON HOLDING TANK

PART NO. **1951**

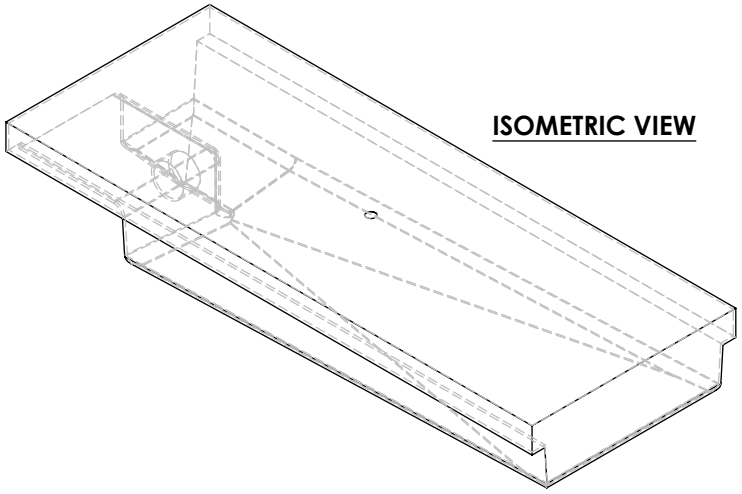

ISOMETRIC VIEW

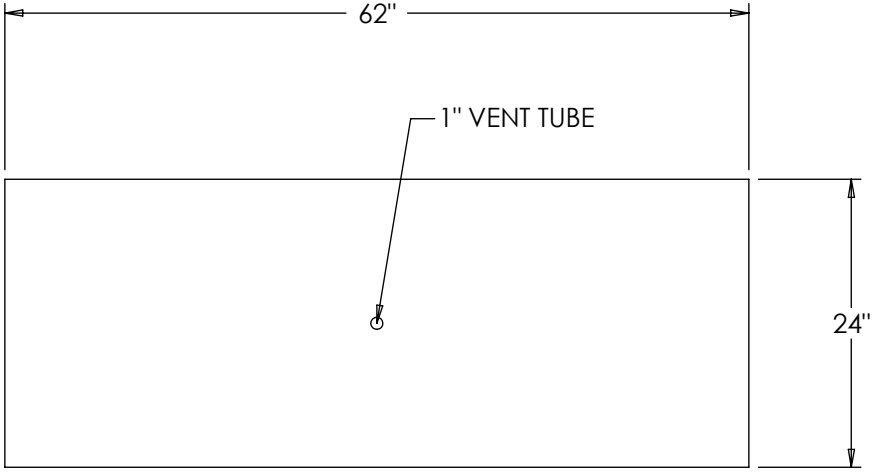

TOP VIEW

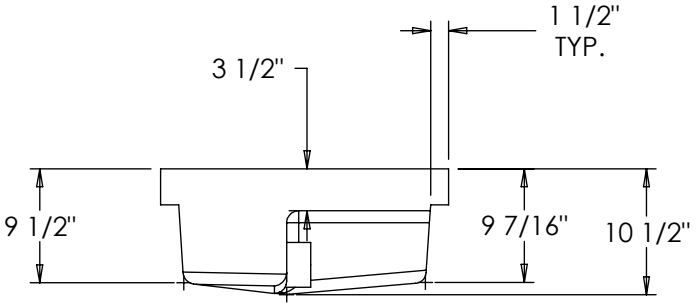

LEFT VIEW

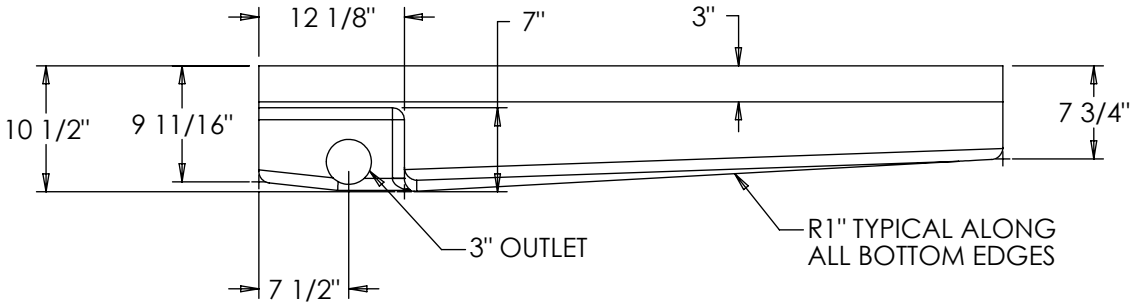

FRONT VIEW

NOTE:
1) UNLESS SPECIFIED, R1/4" TYPICAL.

ELKHART PLASTICS CLAIMS PROPRIETARY RIGHTS IN THE MATERIAL DISCLOSED HEREON. NEITHER THIS DRAWING NOR ANY PRODUCTION THEREOF MAY BE USED TO MANUFACTURE ANYTHING SHOWN HEREON WITHOUT PERMISSION IN WRITING FROM ELKHART PLASTICS TO USER SPECIFICALLY REFERRING TO THIS DRAWING.

ELKHART PLASTICS
MIDDLEBURY
51703 PACKARD DRIVE
MIDDLEBURY, INDIANA 46540

TITLE:

45 GALLON HOLDING TANK

PART NO. **4278**

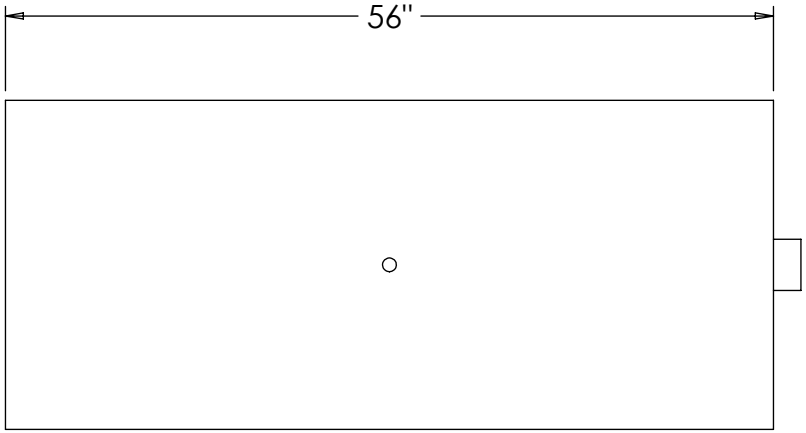

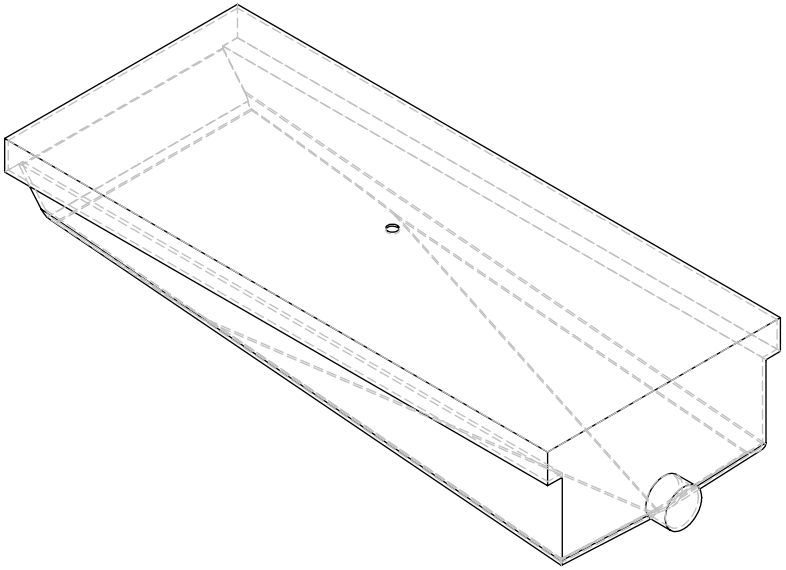

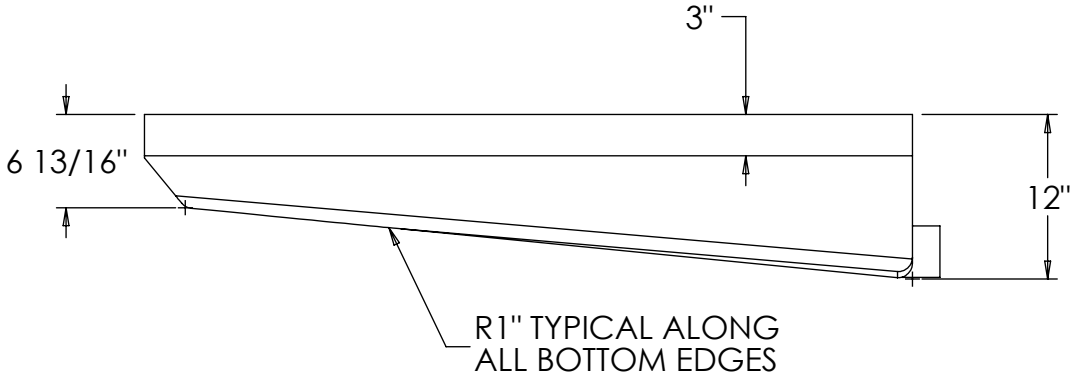

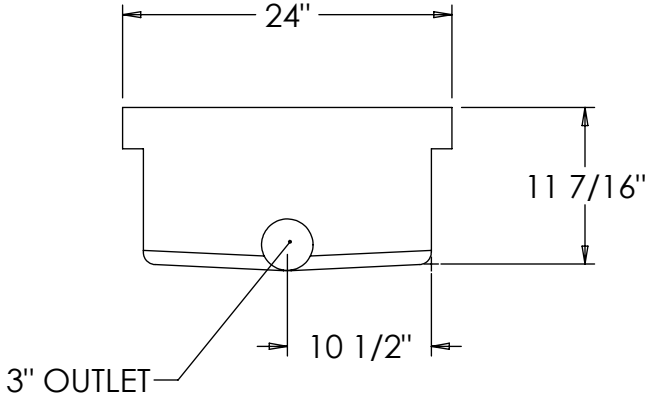

ELKHART PLASTICS CLAIMS PROPRIETARY RIGHTS IN THE MATERIAL DISCLOSED HEREON. NEITHER THIS DRAWING NOR ANY PRODUCTION THEREOF MAY BE USED TO MANUFACTURE ANYTHING SHOWN HEREON WITHOUT PERMISSION IN WRITING FROM ELKHART PLASTICS TO USER SPECIFICALLY REFERRING TO THIS DRAWING.

ELKHART PLASTICS
MIDDLEBURY
51703 PACKARD DRIVE
MIDDLEBURY, INDIANA 46540

TITLE:

45 GALLON HOLDING TANK

PART NO. **4793**

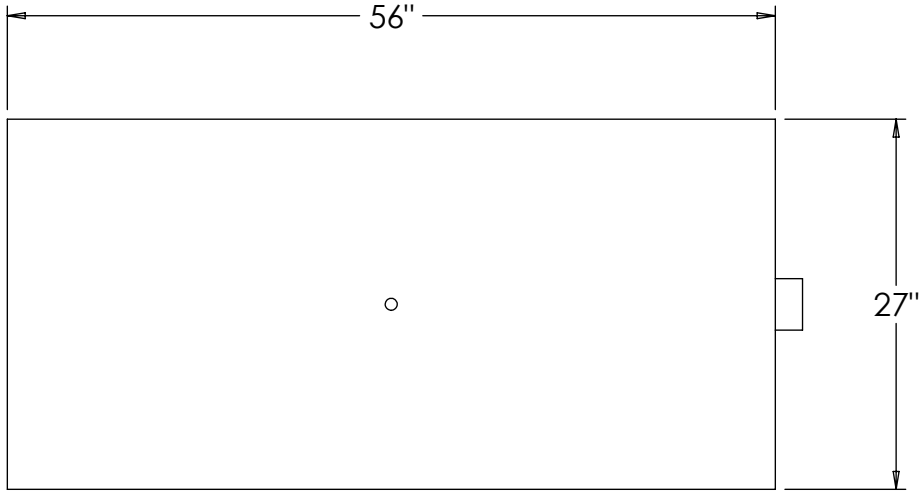

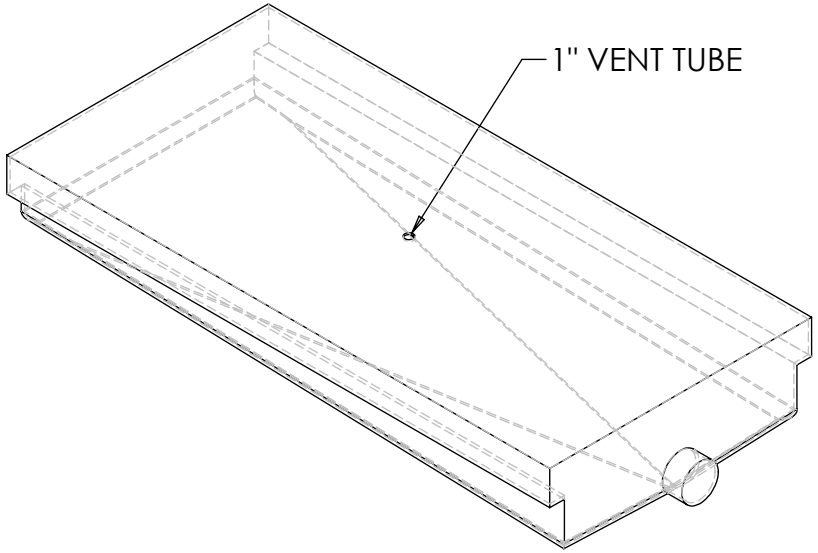

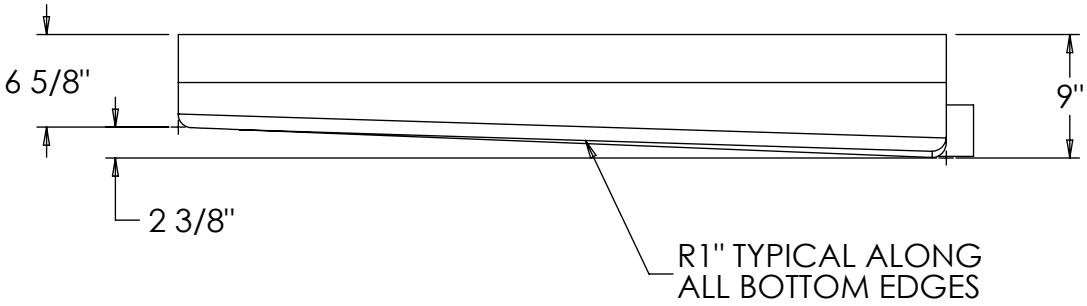

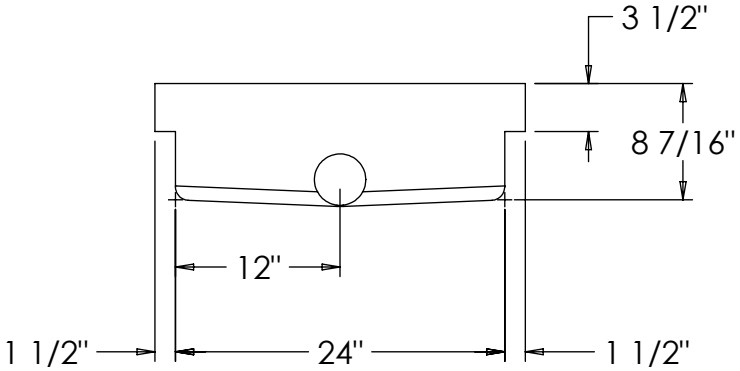

NOTE:
1) UNLESS SPECIFIED, R1/4" TYPICAL.

ELKHART PLASTICS CLAIMS PROPRIETARY RIGHTS IN THE MATERIAL DISCLOSED HEREON. NEITHER THIS DRAWING NOR ANY PRODUCTION THEREOF MAY BE USED TO MANUFACTURE ANYTHING SHOWN HEREON WITHOUT PERMISSION IN WRITING FROM ELKHART PLASTICS TO USER SPECIFICALLY REFERRING TO THIS DRAWING.

ELKHART PLASTICS
MIDDLEBURY
51703 PACKARD DRIVE
MIDDLEBURY, INDIANA 46540

TITLE:

45 GALLON HOLDING TANK

PART NO. **9454**

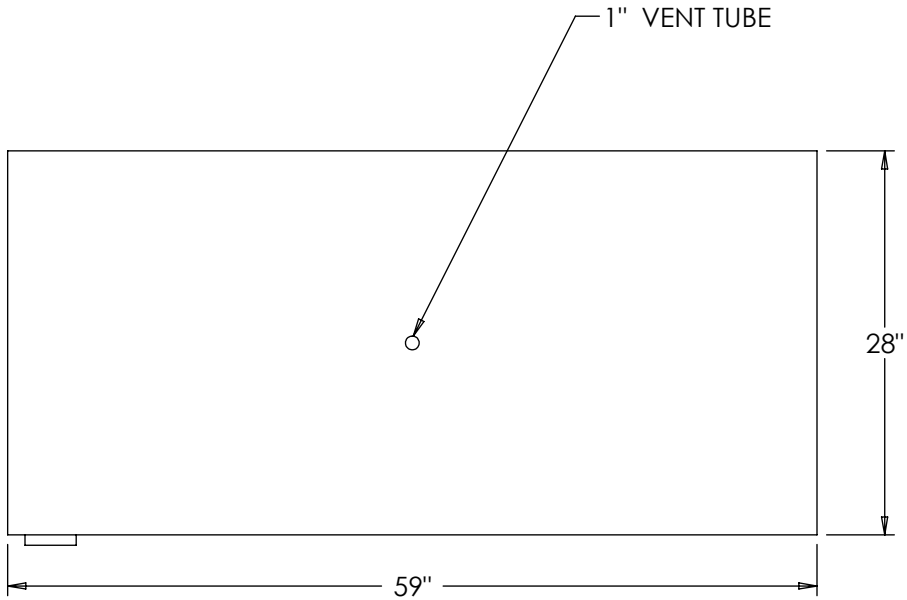

TOP VIEW

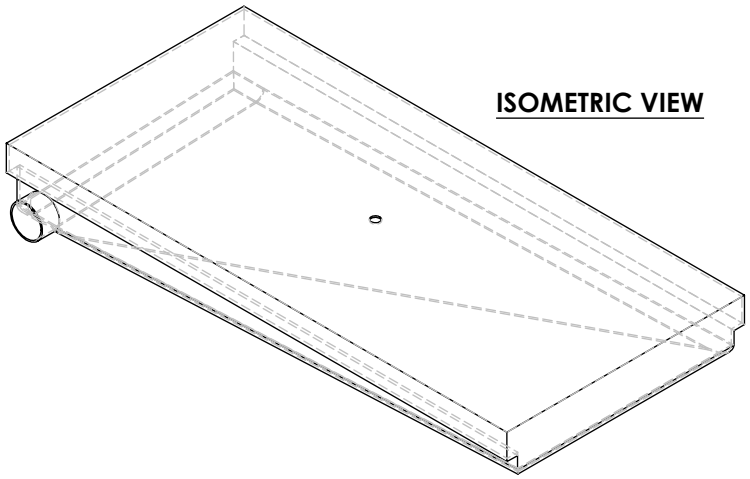

ISOMETRIC VIEW

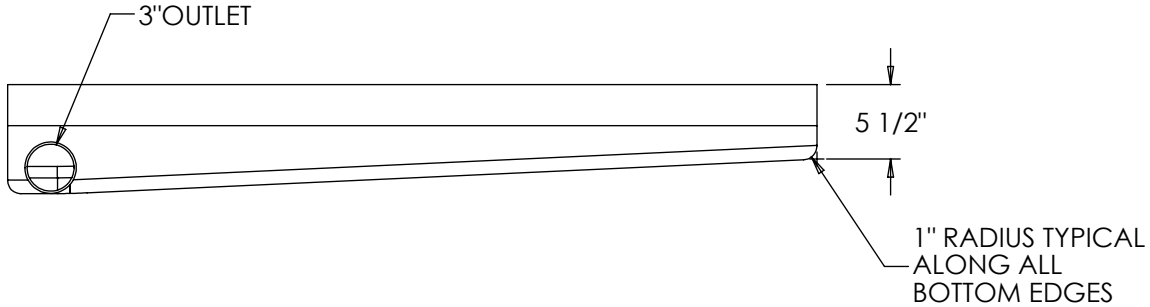

FRONT VIEW

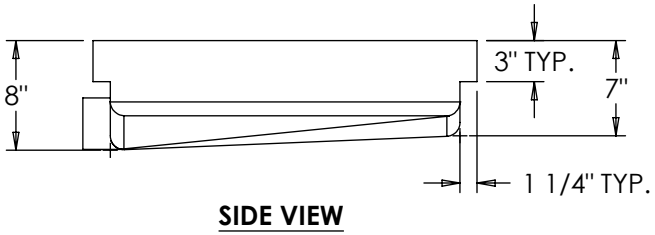

SIDE VIEW

NOTE:
1) 1/4" RADIUS TYPICAL UNLESS OTHERWISE NOTED.

ELKHART PLASTICS CLAIMS PROPRIETARY RIGHTS IN THE MATERIAL DISCLOSED HEREON. NEITHER THIS DRAWING NOR ANY PRODUCTION THEREOF MAY BE USED TO MANUFACTURE ANYTHING SHOWN HEREON WITHOUT PERMISSION IN WRITING FROM ELKHART PLASTICS TO USER SPECIFICALLY REFERRING TO THIS DRAWING.

ELKHART PLASTICS
MIDDLEBURY
51703 PACKARD DRIVE
MIDDLEBURY, INDIANA 46540

TITLE:

45 GALLON HOLDING TANK